Product revision: 1.0
2019-03-19

CrossLink TG

Technical Manual

crosscontrol

www.crosscontrol.com

Contents

Revision history

Rev	Date	Author	Comments
1.0	2019-04-01	Finn Mc Guirk	0

1. Safety and other precautions

1.1. General

IMPORTANT: FOR THE EFFICIENT AND SAFE OPERATION OF YOUR CROSSLINK TG, READ THE INFORMATION BELOW BEFORE USE.

Care must be taken when handling the unit. It should not be dropped or exposed to excessive heat.

Only authorized staff can disassemble the product. In the case that the product was disassembled by un-authorized personnel, the warranty will be void.

Do not push foreign objects into the openings of your device. Doing so can cause fire or electric shock by shorting out interior components.

The product can withstand harsh conditions. But if the product is exposed to severe conditions beyond the limits specified in Environmental Specifications, the product could be damaged.

Keep the device away from radiators and extreme heat sources. Do not use the CrossLink TG submerged in wet or very humid environments.

The device may become hot during normal operation, to avoid burns, switch it off and wait for it to cool before handling it.

Do not clean the device when it is powered. Clean it with a soft cloth. Do not use liquid or aerosol cleaners, which may contain flammable substances.

1.2. CrossLink TG connections

The highest internal voltage applied to the CrossLink TG unit can be 48Vdc and complies with the low voltage European directive.

The power supply can be made with a battery or continuous voltage supply with reinforced isolation, and limited in power to a maximum of 8A and 100VA.

Before you connect the device to a power supply, check the voltage and current rating to ensure that the required current range matches the available power source. Exceeding the specified input range may cause unexpected operation and/or irreversible damage to the CrossLink TG.

When you wish to remove the device from all power sources it is advisable to first turn the device off and then disconnect it from the power supply.

For added safety be sure that nothing rests on the connected cables and that the cables are not located where they can be tripped over or stepped on.

Applying loads outside of the range specified may result in unintended operation and/or possible permanent damage to the CrossLink TG. If there is any uncertainty, please visit https://support.crosscontrol.com/

1.3. EMC Instructions

Use shielded signal cables to ensure that you maintain the appropriate EMC classification for the intended environment.

Keep cables as short as possible for your application, ideally not longer than 3 meters.

1.4. Exposure to RF Energy

Minimize RF energy exposure by limiting the duration of GSM calls and operating the unit in an efficient manner.

The antenna must be mounted in such a position that no part of the human body rests close to any part of the antenna. The product is intended to be used with an external GSM antenna, located at least 20 cm away from any part of the human body. Those installations not complying with this statement are responsible for providing SAR measurement reports and a corresponding declaration.

Do not hold the antenna during a call since it affects call quality and may cause the module to operate at a higher power level than is normally required.

1.5. Antenna care and replacement

Do not use the product with a damaged antenna because an exposed antenna can come into contact with skin, and a minor burn may result. Therefore, replace the antenna immediately.

Use only antennas that are rated in accordance with the technical specifications. Antennas that do not fulfil the specifications could damage the product and may contravene local RF emission regulations or invalidate system approval.

1.6. Electronic devices

Most electronic devices are shielded from RF energy. However RF energy may cause some malfunctioning of improperly shielded electronic devices.

When the product is mounted in a vehicle, check your vehicle to determine that all on board electronic equipment is adequately shielded from radio waves.

In the same way, when the product is in the proximity of medical devices (such as in hospitals, etc.) check with the manufacturer of medical equipment to determine if they are properly shielded.

This equipment should never be operated on an aircraft.

1.7. Blasting areas

To avoid interfering with blasting operations, turn the unit OFF in these situations or in areas ordered to “turn off your two way radio”.

Similarly construction crew often uses remote control RF devices to set off explosives so proper care should be taken in proximity to these areas as well.

1.8. Children

Do not allow children to play with CrossLink TG. It is not a toy and they could hurt themselves or others. Children could also damage the unit.

1.9. Explosive atmospheres

Do not operate this product in environments containing explosive materials or vapour. This includes petrol vapour at service stations.

The unit accessories could generate sparks that can cause an explosion or fire resulting in bodily injury or even death.

To avoid interfering with blasting operations, turn the unit off in areas posted as such.

Do not transport or store flammable gas, liquid or explosives, in the compartment of your vehicle which contains the CrossLink TG or its accessories.

1.10. Handling the device

Observe the following safe-handling guidelines to prevent damage to CrossLink TG:

- When setting up the device for work, place it on a flat level surface.
- Protect the device from environmental hazards such as dirt, dust, food, liquids, temperature extremes, and overexposure to sunlight.
- When you move your device between environments with very different temperature and/or humidity ranges, condensation may form on or within the device. To avoid damaging it, allow sufficient time for the moisture to evaporate before using the device.
- When taking the device from low-temperature conditions into a warmer environment or from high-temperature conditions into a cooler environment, allow the device to acclimate to room temperature before turning on power.
- When disconnecting a cable, pull on its connector or on its strain-relief loop, not on the cable itself. As you pull out the connector, keep it evenly aligned to avoid bending any connector pins. Also, before you connect a cable make sure both connectors are correctly oriented and aligned.

1.11. CrossLink TG with Battery

Some models include the optional lithium-ion battery backup. Do not dispose of the battery along with household waste. Contact your local waste disposal agency for the address of the nearest battery disposal site.

The battery poses a burn hazard if handled improperly. Do not disassemble or handle a damaged battery. If the battery is damaged, electrolytes may leak and can cause personal injury.

Keep the battery away from children.

When the battery is heated to excessive temperatures, its cells could explode, posing a risk of fire.

2. Basic Features

The basic features of this product include:

- Cortex A8 with 512MB DDR3 and 1GB NAND Flash
- Linux Kernel 4.4.19
- Debian Filesystem
- LinX Software Suite
- UMTS/HSPA+: Five Band 800/850/900/1900/2100MHz
- GSM/GPRS/EDGE: Quad Band GSM 850/ EGSM900 / GSM1800/ GSM1900.
- GNSS Receiver 56-channel with -167dBm tracking and navigation sensitivity
- Extensive range of external interfaces (RS-232, digital and analog I/Os...).

- CAN interface.
- Programmable 3 axis accelerometer.
- MicroSD card holder.

Please check the datasheet and product variants for the exact features available in your device.

3. Getting Started with the UDK

This section explains the steps to install and configure the UDK development kit to begin the set-up of the customer applications.

3.1. Layout

The standard unit has GSM and GNSS external antenna connectors, while Bluetooth and Wi-Fi antennas are internal, as shown in the following image.

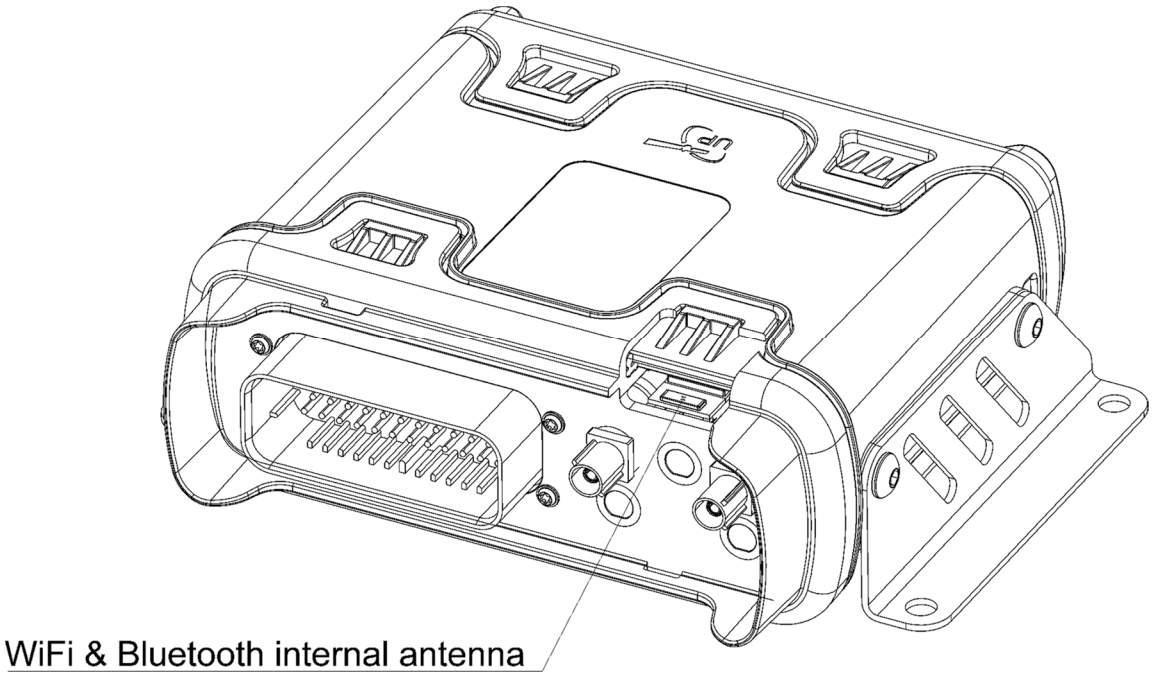

When using either Wi-Fi or Bluetooth functionality, try to make sure that the installation exposes this side of the unit. The “UP” mark shows the side that should be exposeed, and the front should also not be in direct contact with metallic surfaces.

Pin-out for an M12 Connector

M12	RJ45 (Ethernet)
1 TD+	1TX+
2 RD+	3RX+
3TD-	2TX-
4RD-	6 RX-

3.2. Developer's Board

The following figure shows a descriptive and detailed layout of the Development Board and its associated connectors.

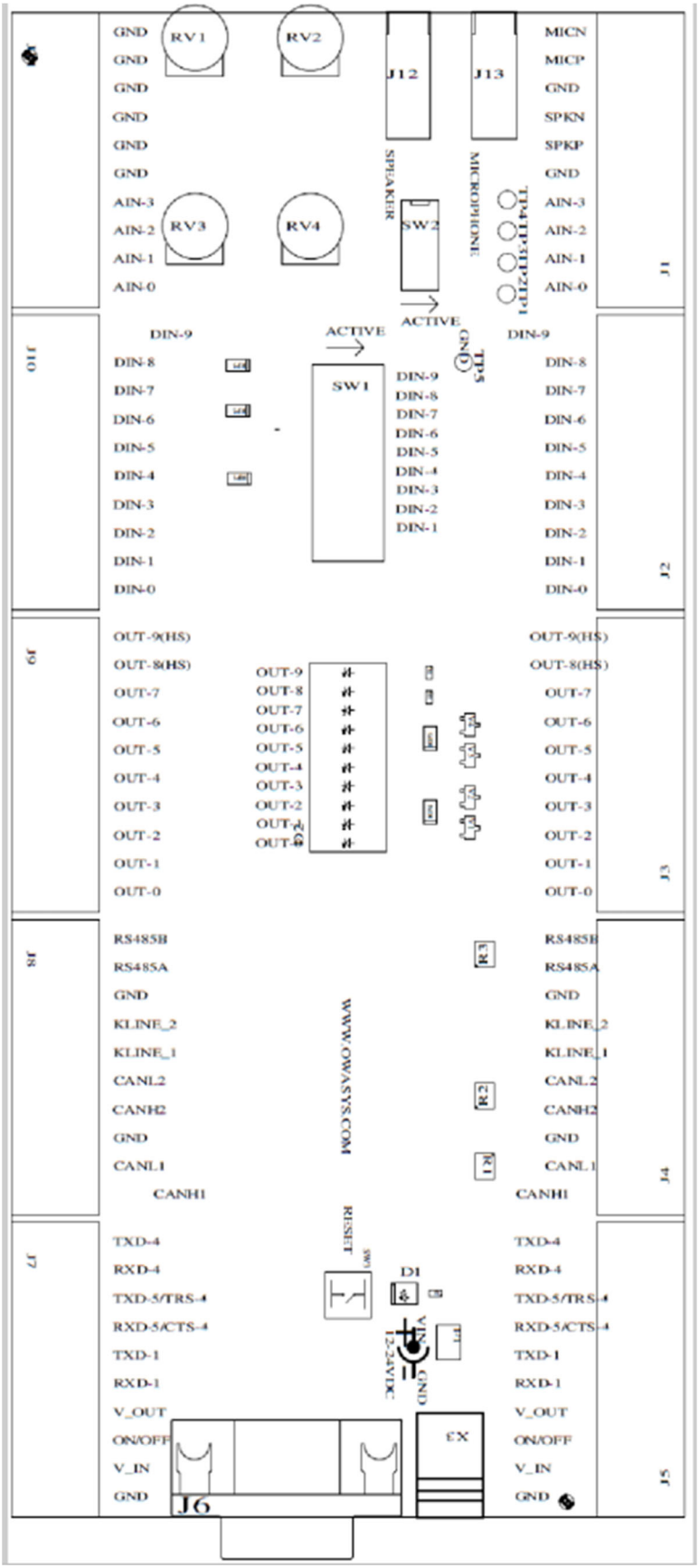
RV1
RV2
RV3
RV4
J12
J13
SW2
SW1
J1
J2
J3
J4
J5
J6
J7
J8
J9
J10
GND
AIN-3
AIN-2
AIN-1
AIN-0
MICN
MICP
SPKN
SPKP
DIN-9
DIN-8
DIN-7
DIN-6
DIN-5
DIN-4
DIN-3
DIN-2
DIN-1
DIN-0
OUT-9(HS)
OUT-8(HS)
OUT-7
OUT-6
OUT-5
OUT-4
OUT-3
OUT-2
OUT-1
OUT-0
RS485B
RS485A
KLINE_2
KLINE_1
CANL2
CANH2
CANL1
CANH1
TXD-4
RXD-4
TXD-5/TRS-4
RXD-5/CTS-4
TXD-1
RXD-1
V_OUT
ON/OFF
V_IN
ACTIVE
SPEAKER
MICROPHONE
TP4
TP3
TP2
TP1
TP5
R1
R2
R3
D1
RESET
12-24VDC
X3
WWW.OWASYS.COM

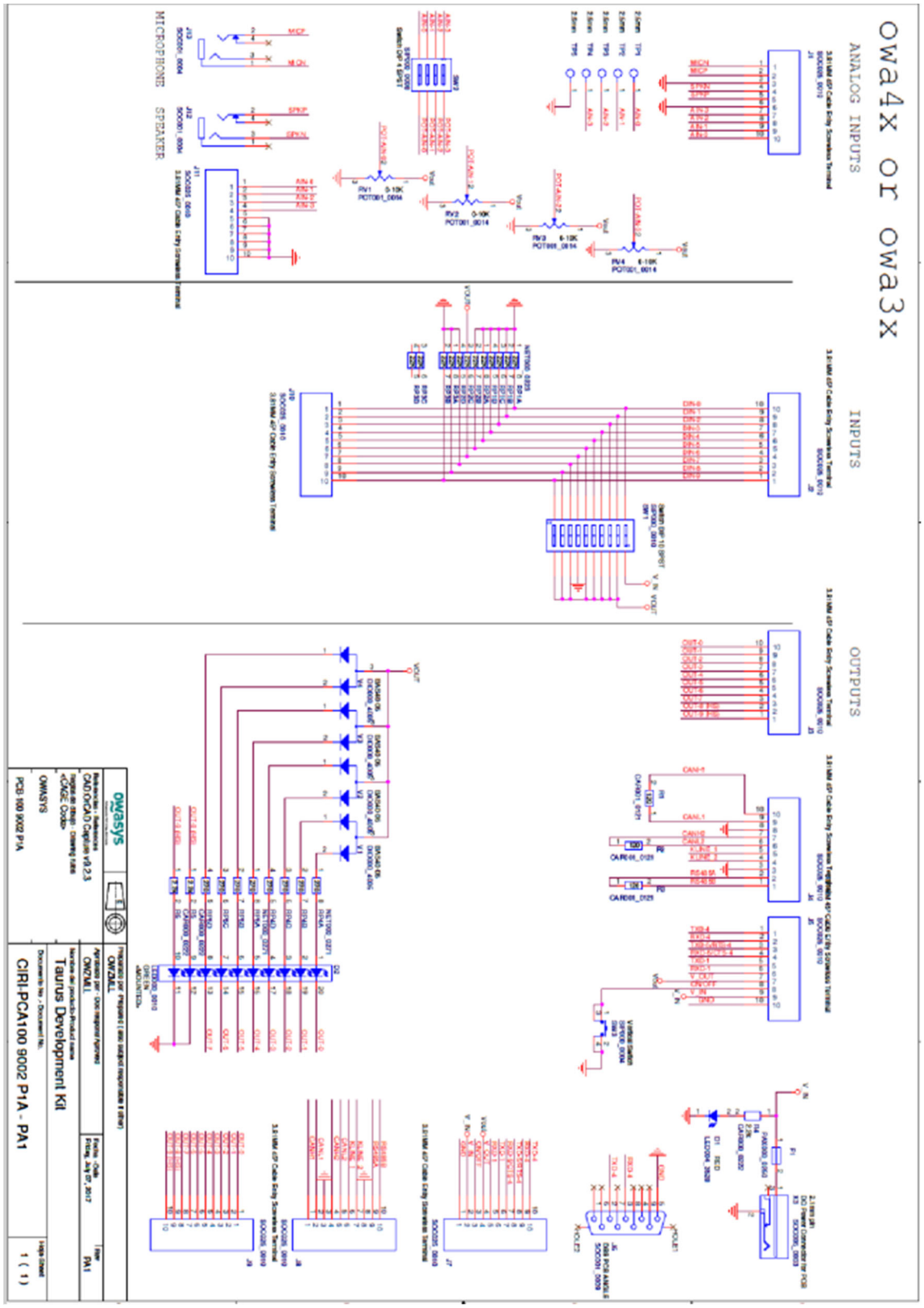

Number	Connector
J1	Connector for audio and analog inputs from CrossLink TG
J2	Connector for digital inputs from CrossLink TG
J3	Connector for digital outputs from CrossLink TG

J4	Connector for CAN KLINE and RS485 from CrossLink TG
J5	Connector for power, and RS232 interfaces from CrossLink TG
X3	Jack for DC power supply, 12V or 24V.
J6	DB9 for main uart, UART4
J7	Connector for external devices
J8	Connector for external devices
J9	Connector for external devices
J10	Connector for external devices
J11	Connector for external devices
J12	Jack speaker
J13	Jack microphone

Power may be connected to either X3 or J7. The power input range is 7V – 48V, a fuse F1 is internally mounted to help prevent damage to other components in case of over-voltage.

Connectors J1 to J5 connections for required signals must be connected to the CrossLink TG. All the signals are available in the connectors mounted in the front in the case that they have to be connected to additional external devices.

In order to test the analog inputs, potentiometers are provided. The switch may select the potentiometer or leave the signal open for an external signal source to be connected.

Digital inputs have switches to change the default status, in order to test the behaviour of all them.

Digital outputs have led indicators, to indicate when they have been activated.

Pin	Signal
J1-1	MICN
J1-2	MICP
J1-3	GND
J1-4	SPKN
J1-5	SPKP
J1-6	GND
J1-7	AIN-3
J1-8	AIN-2
J1-9	AIN-1

Analog inputs are connected to potentiometers through switches. The switches should be in the OFF position if additional external signal sources are to be applied.

Pin	Signal
J2-1	DIN-9
J2-2	DIN-8
J2-3	DIN-7
J2-4	DIN-6
J2-5	DIN-5
J2-6	DIN-4
J2-7	DIN-3
J2-8	DIN-2
J2-9	DIN-1

Digital inputs have pull downs in the Development kit and a switch to connect to a high level for input testing.

Digital input 6 is inverted, so it has a pull up by default, and the switch connects the input to GND.

If external signal sources are to be connected the switches should be set in the OFF state.

Pin	Signal
J3-1	OUT-9(HS)
J3-2	OUT-8(HS)
J3-3	OUT-7
J3-4	OUT-6
J3-5	OUT-5
J3-6	OUT-4
J3-7	OUT-3
J3-8	OUT-2
J3-9	OUT-1
J3-10	OUT-0

Digital outputs 0 to 7 are open drain, so they give a low value when active. Digital outputs 8 and 9 are High side so they provide a high value (V_IN) when active. All the signals have LEDs to provide a visual indication of the status of the output. The LED will be on when the output is activated.

Pin	Signal
J4-1	RS485B
J4-2	RS485A
J4-3	GND
J4-4	KLINE_2
J4-5	KLINE_1
J4-6	CANL2
J4-7	CANH2
J4-8	GND
J4-9	CANL1
J4-10	CANH1

Note that to use RS485 or CAN, a 120Ω termination resistor must be placed at each end of the network. In the development kit there is a termination resistor of 120 ohms soldered for each bus.

Pin	Signal	Function
J5-1	TXD-4	TX UART4 (Main uart)
J5-2	RXD-4	RX UART4 (Main uart)
J5-3	TXD-5/RTS-4	TX UART 5
J5-4	RXD-5/CTS-4	RX UART 5
J5-5	TXD-1	TX UART1
J5-6	RXD-1	RX UART1
J5-7	V_OUT	+5V voltage output 500mA MAX
J5-8	ON/OFF	Connect to ground to power down
J5-9	V_IN	Power input
J5-10	GND	Ground

RS232 interface signals of the UART4 go to J6 DB9 connector too.

J7, J8, J9, J10, J11 connectors are directly connected to signals coming from the CrossLink TG connectors in order to connect external devices or signal sources.

3.3. Connecting the CrossLink TG Development Kit

The steps for mounting the components in the device are as follows:

Antennas: Connect the antennas used for the application, 3G, GNSS etc.

DB9 RS-232 Serial connector: Connect a RS232 connector, or USB to RS232 connetor to the PC to debug the unit.

Signals: Connect the signals needed to the development kit in the connectors J1 to J5. The development kit has specific use for each of the signal in each of the connections. DIOs should be connected to the DIN or DOUT depending on which feature is to be tested.

RJ11 cable:

microSIM card: The microSIM card should be introduced in the SIM card compartment. The SIM card contacts should be faced upwards. Push the SIM card until hearing a click and then lock it with the flap.

AC/DC Power supply: Provided AC/DC power supply adaptor can be connected to developers board, connector X3, and to a suitable AC main outlet. Alternatively a laboratory power supply can be connected to V_IN and GND at J7 connector.

3.4. Connecting to a PC

3.4.1. Serial Connection

Either Linux OS or Windows OS can be used to connect to the device from a Personal Computer (PC) through the serial port. The required configuration parameters are the following:

- Bit Rate: 115200 bps
- Data Bits: 8
- Parity: none
- Bit Stop: 1
- Flow Control: None

3.4.2. Windows HyperTerminal

Use Windows HyperTerminal to connect the device to the PC configuring the serial port parameters to the values indicated in previous section.

Switch on the CrossLink TG. Once the Kernel is loaded in RAM memory and the system is running, the device waits for the user to enter a valid user name to log in. The default user name is root and the password is root. There is an additional user, debian and password temppwd.

Once logged in, the user is in the CrossLink TG file system which has the directory structure of a usual Linux distro, in this case Debian Jessie.

To transfer a file from the PC to the CrossLink TG, change to /home directory or to the directory where the file is to be stored (cd /home or cd /directory_name), type rz command and choose the Transfer-> Send File... option from the HyperTerminal.

To transfer a file from the device to the PC, change to the directory where the file is, then type sz command indicating the name of the file (sz file_name) and choose the Transfer -> Receive File... option of the HyperTerminal. In both cases the file transfer protocol is zmodem.

3.4.3. Linux Minicom

Run the minicom program and configure the serial port parameters to the values indicated in previous section. Minicom help is showed by typing Ctrl-A Z.

Serial port device files (/dev/ttyS0, /dev/ttyS1...) must have reading and writing permissions for all users. Log in as root and type chmod a+rw /dev/ttySx in order to change permissions.

Switch on the CrossLink TG and wait until a login prompt appears. Log in as root user with password root to enter into the device operating system.

To transfer a file from the local PC to the device, change to /home directory (or to the directory where the file is to be stored), type rz command in CrossLink TG OS, type Control-A S so that the minicom knows the file that is to be transferred. The file transfer protocol is zmodem.

To transfer a file from the device to the local PC, change to the directory where the file to be transferred is stored, type sz command indicating the name of the file (sz file_name) and type Control-A R so that the minicom starts to receive the file. The file transfer protocol is also zmodem.

3.4.4. Ethernet Connections

To communicate with the CrossLink TG using an SSH connection can be stablished too using the Ethernet interface, if the unit features this option. The system sets the SSH daemon up by default, and its configuration is:

IP: 192.168.10.1

Port: 22 (default port of SSH)

In order to use this connection, connect to this IP using these credentials:

- user: debian
- password: temppwd

The root user can not login to the system by default for security reasons, and it is nenot recommended to do so. In order to be able to change any configuration, edit the file /etc/ssh/sshd_config.

4. Main Features

4.1. Microprocessor and Memory

CORTEX A8 at 800MHz clock speed with 512 MB of DDR3 and 1GB of non-volatile NAND FLASH. These provide, in terms of available user space, 468 MB free RAM and 834 MB free Flash for the default configuration, with a basic Debian running in the system.

4.2. GSM/GPRS System

The CrossLink TG provides GSM communication (Quad band GSM 850/900+1800/1900 as the default configuration). Audio calls, data calls and Short Message Service are the features supported by GSM.

GPRS is a widely deployed value added service of the cellular infrastructure that enables direct access to public and private data networks (Internet, corporate networks, private networks...). Using the CrossLink TG GPRS service instead of a simple GSM service significantly reduces traffic cost since resources are only allocated when data is to be sent/received.

GPRS service is class B and class 12. Four time-slots for the downlink and one for the uplink are available.

HSPA is also available as option with HSDPA Cat.8 / HSUPA Cat.6 data rates: DL 7.2Mbps and UL 5.7Mbps.

4.3. GNSS

GNSS (Global Navigation Satellite System) includes most of the available regional systems composed of a constellation of satellites orbiting the Earth, such as GPS, GLONASS, Galileo and Beidou, transmitting signals that allow the GNSS receivers to determine the receiver position (longitude, latitude and height) and time (Universal Time Coordinated, UTC).

With the GNSS module included in CrossLink TG, accurate position and time information is provided for Location Based Applications. The default datum used by the GNSS is WGS-84.

The GNSS can work in 2D navigation (viewing 3 satellites) or 3D navigation (viewing at least 4 satellites). When the GNSS starts up, it gives a valid position as soon as it sees 3 satellites, but it can only know the altitude once it sees 4 satellites. This is the reason why in the starting process, there is the possibility of a position jump. This position jump is more likely to happen the greater the altitude is.

The GNSS outputs the altitude as HAE ("Height Above Ellipsoid") (i.e. WGS-84). But since an ellipsoid cannot model the shape of the earth perfectly, one can see some deviation from the so-called "Mean Sea Level" altitude. MSL refers to the actual sea level. The difference between these two altitudes can exceed 100m.

The supported GNSS receiver is Ublox NEO-M8N.

4.4. Battery Back-Up

The CrossLink TG is provided with a small dedicated internal battery for RTC and GNSS data retention. In addition to this it is possible to install a high capacity battery to allow continuous operation of the CrossLink TG without external power. Units that have this option fitted in the factory have the "/b" suffix.

4.5. RTC and GNSS Data Battery

This is a small dedicated non-rechargeable battery which is supplied with all CrossLink TG units to provide backup of the RTC and GNSS data. The RTC will be maintained for 10 years. The GNSS data is continuously backed-up.

4.6. Optional HC Battery

Optional Li-ion batteries are available for the device. 3350mAh and 13400mAh high capacity battery back-ups can be installed, which allows continuous operation when the main power is lost. This enables the CrossLink TG/b to, for example, make a final call before going into low power mode, or a similar procedure, as defined by the customer application software.

4.7. USB Interfaces

USB connector with mass storage functionality.

Pin	Signal	Function
1	VBUS	+5 V
2	D-	Data -
3	D+	Data +
4	GND	Ground
Connector Type		USB Type A
Mating Connector		Male Tyoe A
Location		Back Panel

4.8. Machine Connectors

To provide maximum flexibility, a 35 pin TE automotive connector is provided with power input, several RS232 interfaces, digital and analog I/Os and a CAN bus connection.

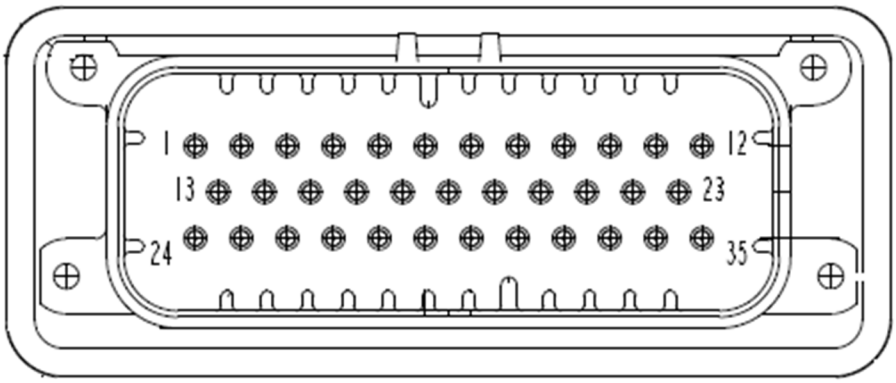

1	2	3	4	5	6	7	8	9	10	11	12
V_OUT (5V)	ON/OFF	AIN2	AIN3	CANH1	CANL1	CAN2H	CAN2L	RS485A	RS485B	MICN	MICP

13	14	15	16	17	18	19	20	21	22	23
GND	GND	AIN0	DIO-0	DIO-1 / AIN1	DIO-2 /CAN3L	DIO-3 / CAN3H	DIO-4/ CANL4	DIO-5 / CANH4	DIO-6 (iButton	DIO-7/KLINE

									)	2

24	25	26	27	28	29	30	31	32	33	34	35
V_IN	DIO-8 (high side)	DIO-9 (high side)	TXD-4	RXD-4	TXD-5 / RTS-4	RXD-5 / CTS-4	TXD-1	RXD-1	KLINE1	SPKN	SPKP

Pin	Signal	Type	Low Level	Max Range
1	V_OUT 5V	Power output		
2	ON/OFF	Input	OFF 0V	ON Open
3	AIN2	Input	0V	5.12V or 30.72V
4	AIN3	Input	0V	5.12V or 30.72V
5	CANH1	BUS		
6	CANL1	BUS		
7	CANH2	BUS		
8	CANL2	BUS		
9	RS485A	BUS		
10	RS485B	BUS		
11	MICN	AUDIO		
12	MICP	AUDIO		
13	GND	POWER		
14	GND	POWER		
15	AIN0	Analog Input	0	5.12V or 30.72V
16	DIO-0	Digital Input	0-6V	9V -50V
	DIO-0	Open Drain Output	0,6V@200mA	
17	DIO-1	Digital Input	0-2V	3.3V -50V
	DIO-1	Open Drain Output	0,6V@200mA	
	AIN1	Input	0	5.12V or 30.72V
18	DIO-2	Digital Input	0-2V	3.3V -50V
	DIO-2	Open Drain Output	0,6V@200mA	
	CAN3L	BUS		
19	DIO-3	Digital Input	0-2V	3.3V -50V
	DIO-3	Open Drain Output	0,6V@200mA	
	CAN3H	BUS		
20	DIO-4	Digital Input	0-2V	3.3V -50V
	DIO-4	Open Drain Output	0,6V@200mA	
	CANL4	BUS		
21	DIO-5	Digital Input	0-2V	3.3V -50V
	DIO-5	Open Drain Output	0,6V@200mA	
	CANH4	BUS		
22	DIO-6	Digital Input	0-1V	1.6V -50V
		Open Drain Output	0,6V@200mA	

	iButton	BUS		
23	DIO-7	Digital Input	0-2V	3.3V -50V
		Open Drain Output	0,6V@200mA	
	KLINE 2	BUS		
24	V_IN	POWER		
25	DIO-8(high side)	Digital Input	0-2V	3.3V -50V
	DIO-8(high side)	High Side Output 1A		VIN
26	DIO-9(high side)	Digital Input	0-2V	3.3V -50V
	DIO-9(high side)	High Side Output 1A		VIN
27	TXD-4	RS232		
28	RXD-4	RS232		
29	TXD-5	RS232		
	RTS-4	RS232		
30	RXD-5	RS232		
	CTS-4	RS232		
31	TXD-1	RS232		
32	RXD-1	RS232		
33	KLINE1	BUS		
34	SPKN	AUDIO		
35	SPKP	AUDIO		

4.9. Power Supply

Power supply in pin 24 of the machine connector is used to supply power to CrossLink TG. Signals used for this purpose are:

Pin	Signal	Type	Low Level	Max Range
24	Vin	Power in	9v	48.0V
13	GND	Ground	-	-
2	ON/OFF	Input	OFF= 0-0.5v	On = Leave OPEN

Vin and GND should be connected to a clean, stable supply between 9.0 and 48.0 Vdc. A cable with a current rating of more than 5A should be used.

The power supply can be maintained with a battery or continuous voltage supply with reinforced isolation, and limited in power to a maximum of 8A and 100 VA.

ON/OFF: Power Control Input signal. Leave open for ON, Connect to ground for OFF. Use an open collector transistor or switch to ground, but do not drive high. This input will turn the unit ON or OFF. When running from battery back-up, this signal can only be used to turn the unit OFF. If the signal is then released and there is no power on Vin, then the unit will remain OFF.

4.10. Digital I/O

The CrossLink TG provides up to 10 configurable digital Input/Outputs, from DIO0 to DIO9.

These pins can be configured as inputs or as outputs. Note that if the pin is configured as an output it cannot be used as an input, and may be damaged if a voltage is applied while it is configured as an output. Hence it is advisable to ensure that the corresponding output pin is OFF before using it as an input. See the programming guide for more details.

The digital inputs are not TTL compatible, and they can withstand inputs up to 50V so that sensors and switches with higher voltages can be used. For example, in an automotive application, a switch may be connected to the positive supply giving an input of 14V or 28V. The input impedance is 68K.

All inputs are inverted except DIO6, which is ready to take a iButton on it, and the range is also different when using this pin as input (see connector table).

If the digital output is set to 1 in the software it will be OFF and the transistor will pull the output pin to ground giving a low level. If it is set to 0 in the software it will be ON and the transistor will be open. Note that there are no pull-ups on these pins so to obtain a high level when the output is ON requires an external pull-up to a positive supply.

The DIO0 to DIO7 outputs are open collector transistor type capable of switching up to 50V and sinking up to 100mA. Do not place a load that will draw more than 200mA or as it may result in damage to the unit.

With these open collector outputs the load should be connected between the output pin and a positive supply. The positive supply could be provided by the user, or from the pin Vout (pin 23). The maximum output current from Vout is 500mA, which should be sufficient to drive up to 8 LEDs, Opto-couplers or Solid State Relays at 10-12mA each. A typical connection for one output is shown below.

For an inductive load (such as a relay or motor) it is necessary to connect a free-wheeling diode to provide a return path to the supply for the inductive energy, as shown below. Otherwise the resulting voltage spikes during switch off could damage the output circuitry.

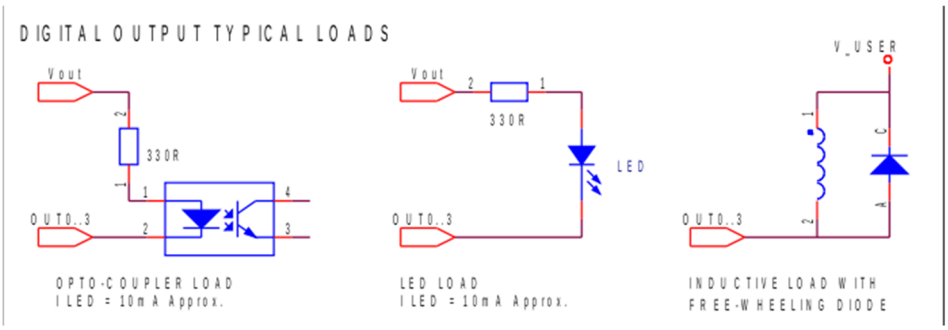

DIO9 are high side switched digital outputs with Vin as input voltage and with which a maximum of 1A current can be drawn from them. If loads with higher power are required, the user can connect them to these outputs. The maximum inductive load is 100 mH.

4.11. Analog Inputs

The 4 analog inputs AIN0 to AIN3 present the following characteristics:

Input	Value
Resolution	12 bits

Input range	0-5.12V (1.25mV per bit) or 0-30.72V (7.5mV per bit)
Accuracy	±1% typ. @ 25°C
Input impedance	68K

4.12. RS485

The CrossLink TG provides an RS485 bus driver.

The 32 devices can be connected in parallel to this interface.

In the following diagram an example of a set of devices connected to the device through a RS485 bus is shown.

The first and last devices in the bus should be equipped with terminating resistors of 120 ohms. CrossLink TG does not have this terminating resistor internally so it must be added externally as depicted in this diagram.

CrossLink TG connected using RS485

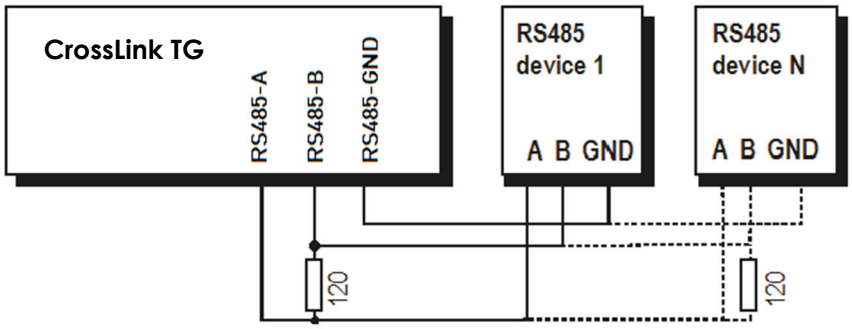

4.13. CAN

The CrossLink TG includes two CAN transceivers V2.0B at 1 Mbaud. For more detailed information see the Programmers and Software Manual.

4.14. Ground

CrossLink TG provides a ground connection for all interfaces, digital I/Os, RS485, CAN and analog inputs.

4.15. Speaker Connection

Audio output is of BTL type (Bridge Tied Load). That means none of the speaker signals are internally connected to ground.

Never connect any terminal of the loudspeaker output to ground or power supply as it may damage either the speaker or the CrossLink TG.

The recommended external loudspeaker has the following features:

- Impedance higher than 3 Ω
- Required power handling: 1.5 W over 8 Ω and 2.5 W over 4 Ω
- Frequency responser between 300 Hz – 3.4 Khz (recommended)

4.16. Microphone connection

Microphone input in of unbalanced type (signal is referred to ground) and accepts electret type microphones. Those are the type of microphones most widely used for consumer purposes. They provide very good performance at a very low price. They need a clean, very stable power supply (usually called VBIAS) that is provided by the CrossLink TG. Signal Input and VBIAS share the same pin in the connector, as this is the connection usually found in commercially available microphones.

Microphone sensitivity is usually expressed in terms of voltage/acoustic pressure (dB/µPa.). Higher value means best sensitivity, so a microphone rated at -46 dB/µPa is worst than other at -36 dB/µPa

The recommended features of the microphone are:

- Use only electret type microphones
- High sensitivity is recommended for hands-free applications (in the range of -46 dB/µPa
- Impedance equal or higher than 1 KΩ
- Connector with signal and BIAS tied together

4.17. SIM Card

The SIM Card Holder utilises a push-push connector and it is for the GSM/GPRS service. It supports both 1.8v and 3v cards.

4.18. Antennas

The GSM Antenna can be attached through the front panel by mating a FAKRA connection type D. The GNSS Antenna can also be connected through the front panel using a FAKRA connection type C (blue).

By means of internal circuitry, the device can detect if the GNSS antenna is operating correctly, if there is an open circuit or a short circuit.

4.19. LEDs

There are 6 LEDs, 4 at the front and 2 at the rear.

The LED colours and functions are detailed below:

Name	Colour	Indication	Comment
GNSS	Orange	GNSS activity	Can be controlled by user
STATE	Red	As defined by application	Controlled by user
PWR	Green	As defined by application	Controlled by user
RADIO	Yellow	GSM activity	Can be controlled by user
LINK	Green	Ethernet Link	Controlled by ETH (optional)
100 Mbps	Yellow	Ethernet 100Mbps	Controlled by ETH (optional)
GNSS	Orange	GNSS activity	Can be controlled by user

The green LED on the CrossLink TG is user programmable. For more information about the control of the Red LED, see CrossLink TG programmer and software manual.

The yellow LED is used to indicate the status of the GSM Module:

GSM Module State	Yellow LED
OFF	Off
ON without cellular coverage	On fast blinking
ON with cellular coverage	On slow blinking

The yellow LED is off until the device is switched ON and the GSM module is powered on and registered to the network.

This yellow LED may be configured by the user to follow its own state code. However, the user must enable it explicitly first, as by default is controlled by the GSM module and this has preference over the usage from the user application.

The orange LED on CrossLink TG is controlled by the GNSS module and gives one pulse per second when the GNSS module has coverage.

GNSS Module State	Orange LED
OFF	Off
ON without valid fix	Off
ON with valid fix	One pulse per second

The orange LED may also be configured by the user to follow its own state code. However, the user must enable it explicitly first, as by default is controlled by the GNSS module, and it has preference over the usage from the user application.

The red LED on CrossLink TG is user programmable. For more information about the control of the Red LED, see CrossLink TG Family Programming Guide.

Ethernet activity is indicated by means of the two LEDs.

State	Yellow LED
OFF	OFF
Ethernet 100Mbps	ON
State	**Green LED**
OFF	OFF
Link OK	ON
Activity	ON (blinking)

4.20. RJ45

This connector at the rear of the CrossLink TG, is intended for Ethernet communication.

Pin	Signal	Function
1	TX+	Transmission Positive
2	TX-	Transmission Negative
3	RX+	Reception Positive
4	-	Reserved

5	-	Reserved
6	RX-	Reception Negative
7	-	Reserved
8	-	Reserved
Connector		RJ45, 8 pin Socket
Mating		RJ45 Jack
Location		Rear Panel

4.21. uSD Card

The microSD card has a dedicated slot located above the SIM card holder at the rear of the device.

4.22. Internal Temperature

The device has an internal sensor to measure its internal temperature.

This temperature sensor cannot be used to measure external environment temperature due to the difference between this temperature and the CrossLink TG internal temperature.

The temperature sensor is connected to an internal analog input. See the CrossLink TG programmer and software manual to get further info on this input and how to read it.

- Temperature range: -40°C to +85°C
- Accuracy: ±5°C

4.23. System Time and HW Time

The unit is provided with two different clocks:

The CPU system time: This clock is able to maintain system time in normal operation but loses the time when CrossLink TG is powered off or is put into a low power mode.

The RTC module: This is a dedicated Real Time Clock (RTC) module which is battery backed up so that the time remains correct even when power is removed. The duration of the internal battery is about 10 years.

When the CrossLink TG resumes service from OFF or STANDBY modes, the CPU system time is automatically updated with the value from the RTC module. Hence any changes to the time should be performed on the RTC time as this is the master.

Units have an additional and more precise time reference that is obtained from GNSS data. When available, use this as a reference to set the RTC value.

4.24. Accelerometer

The CrossLink TG carries a 3 axis accelerometer with ±2g/±4g/±8g/±16g configurable ranges and 1mg/2mg/4mg/12mg sensitivity respectively.

The accelerometer can be set in the wake up mask of Standby or OFF mode, in order to wake up when there is a movement bigger than the preconfigured one.

The data from the axis registers can also be obtained using a function of the RTU library, with or without gravity acceleration filter, which can be of use to get the inclination of the device. See API for more information on these functions.

4.25. Ethernet

10/100 Ethernet is provided with an RJ45 connector at the rear side of the CrossLink TG.

The CrossLink TG has also an optional back cover rated IP67 with a cable gland for the Ethernet cable. It has been designed and tested with Yamaichi Y-concable4 (external diameter 6.8mm) and Y-conplug-11 connector.

5. Functional States

The CrossLink TG has a number of modes in which it can operate.

State	Short Description	Active Circuits	Wakeup sources	Wake up time	Max power (TBC)	Power sources
No Power	No power supply available.	RTC	V_IN Main bat	No Power	-	Backup battery
OFF	Minimal power.	RTC		OFF	Minimal power.	RTC
STANDBY	Low power with fast response to wakeup events.	RTC		STANDBY	Low power with fast response to wakeup events.	RTC
RUN	All circuits running.	All	n.a.	RUN	All circuits running.	All

Once the CrossLink TG is switched on, it starts executing the boot loader. Then, if the user stops the process, the CrossLink TG will remain in Service Mode. Otherwise the CrossLink TG continues loading the kernel and the file system.

The customer application is able to select the desired mode, usually based on the current consumptions.

In Run mode the microprocessor is running at 800 MHz. If the customer application wants or needs lower speed, it can send the CrossLink TG to either Standby or Off mode (see CrossLink TG Programming Reference Manual and Programming guide).

From Standby and Off modes, the customer application can wake up the CrossLink TG to Run mode with an event preconfigured with a mask. The difference between Standby and Off modes are the possible events that will be listened for as trigger conditions. For further information about the trigger possibilities, see the CrossLink TG Programmer and Software manual.

These modes offer the possibility to build powerful and flexible applications that can handle situations where power supply can be constrained.

6. Firmware

In order to manage the platform resources, a complete library of APIs, for GNSS management, Internet connection, management of the interfaces, GSM/GPRS functions and other services is made available. Thus, the developer does not need to consider about low level hardware drivers and protocols, and can focus on the application by means of the user-friendly APIs

6.1. Boot Loader

The boot loader manages the kernel and file system flashing.

It waits for 2 seconds before starting up Linux. During this time, if the boot loader receives a character different than SPACE through the serial port, it starts up Linux immediately. If it receives SPACE, it enters into command mode; therefore the received characters are interpreted as commands. Once finished in command mode, send boot command for Linux start up.

The boot can be customized with the necessary u-boot environment variables, which can help the user to recover from unexpected crashes of the FS that can prevent it to run correctly, or remotely make an Over the Air upgrade of the FW. An example to show how the u-boot environment variables can be used for this purpose is listed below:

```
fw_setenv update 1
fw_setenv availableupdate 'ubifsls /home/debian/update/ubi.img'
fw_setenv flashupdate 'ubifsload 0x82000000 /home/debian/update/ubi.img;
nand erase 0x2800000 0x3d800000; nand write 0x82000000 0x2800000
0x7000000; setenv update'
fw_setenv updatecmd 'ubi part NAND.file-system; ubifsmount ubi0:rootfs; if run
availableupdate; then run flashupdate; else echo "Nothing to update"; fi'
fw_setenv bootcmd 'if test -n $update; then echo Running update!!!!...; run
updatecmd; fi; run nandboot'
```

fw_setenv and fw_printenv are the tools needed to set and retrieve environment variables from the CrossLink TG system.

As shown, the u-boot variables can contain conditional statements that can be run by the user.

This example will flash the file system if a file /home/debian/update/ubi.img exists. Take into account that this is an example, which can (should) be easily improved (from the security point of view), as writing the flash memory is a critical function.

6.2. Linux Kernel

This is a Linux standard kernel, version 4.4.19. As this is a standard kernel, PC developed applications are easily made compatible with CrossLink TG platform. Also this kernel can be updated to follow standard kernel revisions.

The File System is based in a Debian distribution, codename Jessie.

The default composition of the flash, includes a recovery file system base in busybox-1.27.2. This file system can be booted in case the Debian file system cannot be booted, for example after changing critical files that prevent the unit from booting up.

6.3. Application Development

Once the cross compiler is installed, the user can use this compiler in the desired development environment, for example, Netbeans.

To use the available APIs library functions, add the included CrossLink TG files in the application header files and compile the application using the provided cross compiler.

Files to be included in customer header files include:

<CrossLink TG/RTUControlDefs.h>

<CrossLink TG/IOs_ModuleDefs.h>

<CrossLink TG/ GSM_ModuleDefs.h>

<CrossLink TG/ INET_ModuleDefs.h>

<CrossLink TG/ GPS2_ModuleDefs.h>

<CrossLink TG/owcomdefs.h>

<CrossLink TG/owerrors.h>

All API module libraries have been written in C Language using the KDeveloper environment with gcc 5.3 cross-compiler tool, under LINUX Xubuntu 16.04 Operating system. It is recommended, to avoid problems from the development environment, to use the same language, compiler, and environment when possible.

Usually, a Client application is comprised of a main executable program, and a set of libraries. This set of libraries can be of two types: system libraries, both static and dynamically loaded; and CrossLink TG API module libraries, always used in a dynamic way.

Once an application is defined, what the user needs to do is select which libraries will be used and get pointers to the needed functions, using them as C language normal functions. For a better use of system resources, it is recommended to unload all functions of a library, as well as the library itself, when it is known that it will not be used any more in the program's scope. Also, it is not necessary to get all functions pointers in a library, if some of them will not be used in the program as it is a waste of memory and system resources which can be useful for other tasks. Minimising the use of resources will improve the system behaviour in general.

Another alternative is to use the .h header of the library to compile the program against the library.

6.3.1. Control (RTU) API

This API provides functions to enter the low power modes and RTC.

6.3.2. API for GSM/GPRS

The communication with the GSM module is done with the GSM and GPRS APIs. Sending and receiving SMSs and making dial calls are some of the functions provided.

6.3.3. API for GNSS

Getting the time and positioning info are some of the developed functions included in this API.

6.3.4. API for I/Os

The functions of this API facilitate the management of the CrossLink TG I/Os, UARTs and audio signals.

6.3.5. CANBus FMS API

There is an available FMS library, that can run in the CrossLink TG under a license. This library provides the most important data in a FMS bus available through a few simple functions. This library must be first enabled to use it. Please request this when you place your order for the device.

6.3.6. RS232 Driver

RS232 driver is used to control all the RS232 interfaces at the machine connector.

7. Updating CrossLink TG Firmware

The FirmWare is composed of following images:

• MLO

• u-boot

• dtb

• Kernel

• Backup FS

• Debian FS

Normally the MLO and u-boot and backup FS should not be updated as previously specified. In the other hand, the dtb, Kernel and Debian FS should be flashed together.

The update is possible in either of the following ways:

7.1. uSD

The FW image can be flashed to the NAND of the CrossLink TG from the bootloader, that previously has been stored in a uSD card.

These are the instructions to flash the MLO, u-boot, DTB, kernel, backup FS and Debian FS.

- Power up the CrossLink TG and press the space bar to enter the bootloader prompt
- Insert the uSD card with the images to flash
- Confirm a FAT32 formatted SD card is accessible

```
mmc rescan
```

- List the files on the uSD card

```
fatls mmc 0
```

If the U-Boot has been updated - Check the u-boot version with the command version at the u-boot prompt, and flash the MLO ONLY if the u-boot version at the dev zone is newer. This step is critical and could brick the unit, so make sure of inserting the commands correctly.

Read the MLO image, erase the old one from the flash and write the new one.

```
fatload      mmc 0 0x82000000 MLO
nand erase.part NAND.SPL
nand write 0x82000000 NAND.SPL ${filesize}
```

If the U-Boot has been updated - Check the u-boot version with command version at the u-boot prompt, and flash the MLO ONLY if the u-boot version at the dev zone is newer. This step is critical and could brick the unit, so make sure of inserting the commands correctly.

Read the u-boot image, erase the old one from the flash and write the new one

```
fatload      mmc 0 0x82000000 u-boot.img
nand erase.part NAND.u-boot
nand write 0x82000000 NAND.u-boot ${filesize}
```

Read the DTB image, erase the old one from the flash and write the new one

```
fatload      mmc 0 0x82000000 am335x-owasys.dtb
nand erase.part NAND.u-boot-spl-os
nand write 0x82000000 NAND.u-boot-spl-os ${filesize}
```

Read the kernel image, erase the old one from the flash and write the new one

```
fatload mmc 0 0x82000000 zImage
nand erase.part NAND.kernel
nand write 0x82000000 NAND.kernel ${filesize}
```

Read the backup FS image, erase the old one from the flash and write the new one

```
fatload      mmc 0 0x82000000 ubi.img.backup1
nand erase.part NAND.file-system.backup1
nand write 0x82000000 NAND.file-system.backup1 ${filesize}
```

Read the Debian FS image, erase the old one from the flash and write the new one

```
fatload mmc 0 0x82000000 ubi.img
nand erase.part  NAND.file-system
nand write 0x82000000 NAND.file-system ${filesize}
```

7.2. TFTP Server

The firmware components can be saved in a TFTP server in the same LAN where the CrossLink TG is connected, or which is accessible to it, and the CrossLink TG can retrieve them using a set of commands.

Take care with this process, over all with MLO and u-boot images reflashing, as writing incorrectly on these could brick the unit.

These are the instruction steps for the whole process:

- Power up the device and press the space bar to enter the bootloader prompt

- Connect the Ethernet cable to the RJ45 connector
- Set the environment variables, for example when connecting the CrossLink TG in a LAN with private IP network 192.168.100.255 and the TFTP server in 192.168.100.1:

```
env set ipaddr 192.168.100.2
env set serverip 192.168.100.1
```

Remove the partitions to be upgraded. From following commands use only the needed ones. The commands remove the MLO, u-boot, DTB 43, kernel, backup FS and Debian FS:

ONLY IF U-BOOT HAS BEEN UPDATED! Check the u-boot version with command version at the u-boot prompt, and flash the MLO ONLY if the u-boot version at the dev zone is newer. This step is critical and could brick the unit, so make sure of inserting the commands correctly.

MLO update

```
tftp 0x82000000 MLO
nand erase.part NAND.SPL
nand write 0x82000000 NAND.SPL ${filesize}
```

ONLY IF U-BOOT HAS BEEN UPDATED! Check the u-boot version with command version at the u-boot prompt, and flash the u-boot ONLY if the u-boot version at the dev zone is newer. This step is critical and could brick the unit, so make sure of inserting the commands correctly.

u-boot update

```
tftp 0x82000000 u-boot.img
nand erase.part NAND.u-boot
nand write 0x82000000 NAND.u-boot ${filesize}
```

DTB update

```
tftp 0x82000000 am335x-owasys.dtb
nand erase.part NAND.u-boot-spl-os
nand write 0x82000000 NAND.u-boot-spl-os ${filesize}
```

Kernel Update

```
tftp 0x82000000 zImage
nand erase.part NAND.kernel
nand write 0x82000000 NAND.kernel ${filesize}
```

Backup FS Update

```
tftp 0x82000000 ubi.img.backup1
nand erase.part NAND.file-system.backup1
nand write 0x82000000 NAND.file-system.backup1 ${filesize}
```

Debian FS Update

```
tftp 0x82000000 ubi.img.1.0.3
nand erase.part  NAND.file-system
nand write 0x82000000 NAND.file-system ${filesize}
```

7.3. Creating a Customized UBIFS

The user can create a customized UBIFS, based on the rootfs available in the dev zone, CrossLink TG FS tree. After decompressing it in the PC and make the desired changes to it, mkfs.ubifs and ubinize commands may be used to create the image. The resulting image will have only one UBI volume storing UBIFS file-system.

```
$ sudo mkfs.ubifs -F -q -r rootfs -m 4096 -e 520192 -c 1980 -o ubifs.img
$ ubinize -o ubi.img -m 4096 -p 512KiB -s 1024 ubinize.cfg
```

Where ubinize.cfg contains:

```
[ubifs]
mode=ubi
image=ubifs.img
vol_id=0
vol_size=953MiB
vol_type=dynamic
vol_name=rootfs
vol_flags=autoresize
```

The options selected in this filesystem image have the following values:

-r <rootfs>: to create an UBIFS image containing the rootfs directory;

-m 4096: to set the minimum input/output unit size of the flash (NAND page in this case);

-e 520192: to indicate the logical eraseblock size of the UBI volume;

-c 1980: to set the maximum file-system size in logical eraseblocks; the resulting filesystem may be put on volumes up to about 982MiB

-p 512KiB: to set the physical eraseblock size of the flash chip;

-s 1024: to indicate that the flash supports sub-pages and sub-page size is 1024 bytes;

7.4. Creating a Customised UBIFS Image using the current FIrmWare

The user can copy the filesystem that is currently in the device by executing the following command:

```
tar --exclude="/dev" --exclude="/run" --exclude="/tmp" --exclude="/temp" \ --
exclude="/proc" --exclude="/mnt" --exclude="/sys" \ --exclude="/lost+found" \
--exclude="/etc/udev/rules.d/70-persistent-net.rules" \ --
exclude="/etc/device.info" --exclude="/etc/pmsrv.info" -cpzf \ ./rootfs.tar.gz /
```

The user can use this command to then extract the file:

```
$ sudo tar --same-owner -zxvf rootfs.tar.gz -C rootfs
```

The original */etc/udev/rules.d/70-persistent-net.rules* file should be copied in the rootfs folder to avoid using the same MAC address on multiple devices.

7.5. Starting the Recovery Image

In case of failure or misconfiguration of the Debian file system, a recovery image can be created. The purpose of this is to mount the Debian partition and to solve its problems, in order to be able of starting it again.

To load the recovery image, enter the u-boot prompt and type these commands:

```
setenv nandroot "ubi0:rootfs rw ubi.mtd=NAND.file-system.backup1,1024"
boot
```

Once booted, check the partitions using the following command:

```
cat /proc/mtd
```

If the file /dev/ubi_ctrl doesn't yet exist, it has to be created using mknod. The correct parameters should be read from /sys/class/misc/ubi_ctrl/dev.

```
cat /sys/class/misc/ubi_ctrl/dev
mknod /dev/ubi_ctrl c 10 58
```

Check which ubifs volume has been generated (e.g /dev/ubi1) and mount the partition (-m 10 is due to the mtd partition number):

```
ubiattach /dev/ubi_ctrl -m 10
mount -t ubifs /dev/ubi1_0 /tmp
```

After the changes have been implemented, boot the device as normal.

8. U-Boot Environment

The u-boot environment variables can be saved permanently in flash, and accessed from the system using fw_printenv and fw_setenv command line tools.

```
root@arm:/# fw_printenv
arch=arm
```

8.1. System Boot Protection

The u-boot has a counter that can be enabled to protect undesired states, where an erroneous FS provokes a continuous reboot cycle of the system.

The following variables can be set to control the desired behaviour:

- **Bootcount**

This variable will be automatically created if it does not exist, and it will be updated at each reset of the processor. After a power-on reset, it will be initialized with 1, and each reboot will increment the value by 1.

- **Bootlimit**

If this variable exists, its parameters are set as the maximum number of reboot cycles allowed.

- **AltBootcmd**

If, after a reboot, the new value of **bootcount** exceeds the value of **bootlimit**, then instead of the standard boot action (executing the contents of **bootcmd**) an alternate boot action will be performed, and the contents of **altbootcmd** will be executed.

The variable *upgrade_available* can be used to activate or disable this protection. If *upgrade_available* is 0, *bootcount* is always 0, if *upgrade_available* is 1 *bootcount* is incremented in the environment.

9. Systemd - system and service manager

Systemd (ref 57) is currently the default init system for Debian and, therefore, for the device. systemd also serves as service manager, whose tasks are organized as units, and systemctl is the main tool used to control the state of systemd.

```
systemctl list-units                # List all units and their current status
systemctl stop unit_name            # Deactivate one or more units
systemctl start unit_name           # Activate one or more units
systemctl restart unit_name         # Stop and then start one or more units
systemctl reload unit_name          # Asks units to reload their configuration
systemctl status unit_name          # Show status information about units
systemctl show unit_name            # Show configuration properties of units
```

9.1. Boot Process

In the device, systemd uses the /etc/systemd/system/default.target configuration file to determine which state, into which it should boot. The default.target file is a symbolic link to the true target file. In particular, the default target in the devicex is multi-user.target which is like runlevel 3 in SystemV. For example, the multi-user.target unit starts other essential system services, such as, networking, D-Bus or systemd-timesyncd.

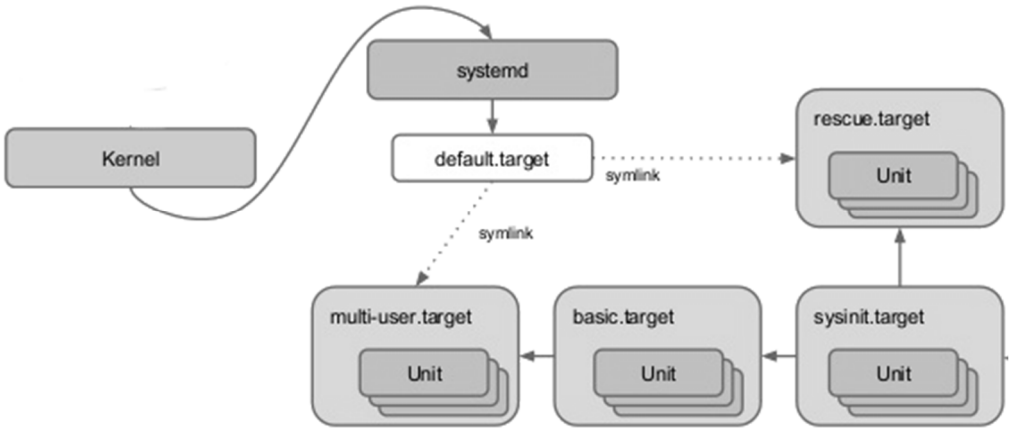

For instance, an end user can switch to single user mode by typing the following command:

```
systemctl isolate runlevel1.target
```

And to stop a serial console:

```
systemctl stop serial-getty@ttyO4.service
```

9.2. Unit Files

systemd provides users an easy interface to configure services. These services are described by a .service file, called unit, whose syntax uses key-value pairs grouped between [section] headers. Unit files are stored under /lib/systemd/system/ and /etc/systemd/system/.

A systemd .service file describes a process managed by systemd in a declaratory way (e.g., the process it starts, its dependencies, and many other parameters). The following example configuration file summarizes the main options in unit files:

```
# location: /etc/systemd/system/
[Unit]
Description = Example unit that runs an application at boot
After      = syslog.target

[Service]
# make sure the shell script is executable (chmod +x $1)
ExecStart   = /home/debian/myCrossLink TGd

# Tell the serive how to kill it / reload.
#ExecStop    = /home/debian/myCrossLink TGd --exit

[Install]
# multi-user.target corresponds to run level 3
WantedBy    = multi-user.target
```

9.2.1. Enabling and Disabling Services

On the CrossLink TG the user can enable multiple applications to automatically start at boot. This is achieved using the following command:

```
systemctl enable application.service
```

It is also possible to disable the service from starting automatically.

9.2.2. Grouping Services

A systemd target file groups a set of services (units). Thus, the dependencies of a target can be listed either within the target file (in the Requires= line), or using a symbolic link to a service file in the /lib/systemd/system/targetname.target.wants/ directory. For instance, /etc/systemd/system/reboot.target.wants/ can contain links to multiple services that systemd will run before rebooting in order to reach reboot.target. For more information, please see the systemd documentation 57.

9.3. System Logging

Systemd provides a logging system, implemented with the journald daemon, for kernel and user-space processes. The journalctl utility is used to access (for example, executed without any arguments, it spews all log messages that occurred since system boot) and filter (including by time, priority and service) logs.

For example, to show only entries associated with the myCrossLink TGd service, logged at the error level or above since January 10th, 2018 at 5:15 PM, you can type:

```
journalctl -u myCrossLink TGd.service -p err --since "2018-01-10 17:15:00"
```

10. Installation

Permanently installed antennas are preferred over magnetic, glass or body lip mounts for anything other than low power or temporary installations. However, a magnetic mount antenna is a good tool for checking the proposed fixed antenna location for unwanted effects or problems.

Glass mounted antennas are suitable for mounting on vehicles. In this case they should be kept as high as possible in the centre of the rear window or wind-shield. Some vehicles use glass that contains a thin metallic coating for defrosting or to control solar gain; glass mount antennas may NOT function properly when mounted on this type of glass.

If a magnetic mounted antenna is used, take care to locate the magnetic base in a location which avoids interference to the compass mechanism, since magnets may affect the accuracy or operation of the compass. If metallic panels are used, do not block the reception paths for installed antennas such as Global Position Satellite Receivers, if so equipped.

For an optimum performance of antennas, consider these aspects:

- The antennas should have an unobstructed view of the sky, especially for GNSS receivers. The antennas should not be shielded by any metal object or other impenetrable material.
- The antennas have to be safe from damage during normal vehicle operation and maintenance.
- GNSS antenna should not be shielded from satellite signals by metal objects or other impenetrable materials.
- Separate GSM and GNSS antenna at least 50 cm.
- Choose a location with access both above and below the antenna-mounting surface. This access is required for installing fasteners and for routing the antenna cable.
- Keep the antenna as separate as possible from the microphone and loudspeaker when the hands-free option is being used.

10.1. Antenna Tuning

It is important that the antenna is properly tuned and Voltage Standing Wave Ratio (VSWR) less than 2.0:1, and to avoid RF current on the antenna cable shield.

10.2. Antenna Cable Routing

Always use a high quality, one-piece coaxial cable. Connector quality and termination techniques are important.

The antenna cables should be treated in the same way as the control and power cables. Avoid sharp edges and pinches and keep the cable as short as possible. Avoid routing the antenna cable in parallel with other control or power wiring over long distances. If it is necessary to cross over additional wiring, cross at right angles.

10.3. Power Connection

When connecting the power please allow enough cabling to enable the removal of the equipment and ensure cables are not damaged or at risk of rubbing against sharp objects.

10.4. Location

Choose a location for the device which allows for convenient routing and connection of the antenna and interface cables, and which has access to power source and status LEDs. When selecting a mounting location, if possible, avoid the following hazards:

- Direct exposure to weather.
- Excessive heat or cold.
- Excessive humidity.
- High vibration areas.
- Corrosive fluids and gases.
- Direct exposure to water.
- Direct exposure to solar radiation.
- Do not obstruct drivers view or impede operation.

10.5. Opening the Unit

In order to insert the SIM card and the microSD card, the rear part must be opened. There are 4 flaps that must be pulled one by one, when all 4 are up, the lid can be removed.

For the opening process no special tool is needed, just a coin (or flat tool) will suffice. In this picture the arrows show how to push the coin once it has been inserted under the flap.

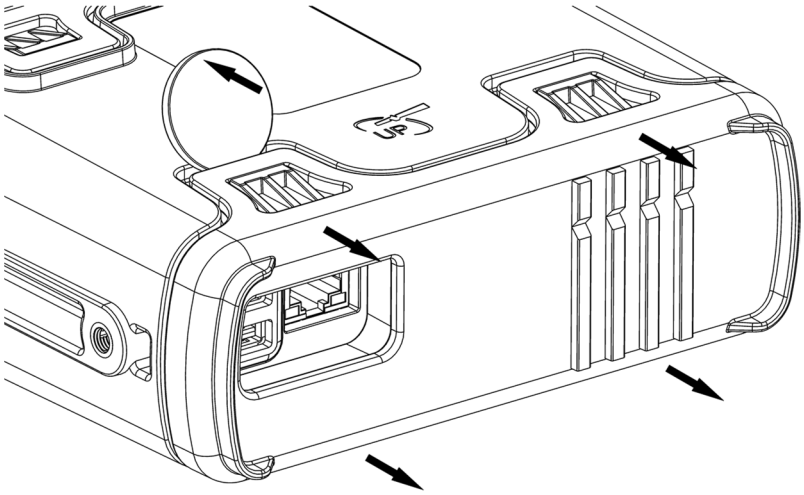

The best procedure is opening one flap, then the flap in the other side, then the one near it and finally the remaining one. For example, and starting as shown in the figure, opening first the flap above the Ethernet / USB connectors in the left side, then the second should be the one under the Ethernet / USB connectors. Third and fourth flaps to open will be the ones above and under the LEDs in the right side of the unit.

10.6. Mounting and Fixing the Unit

Always try to keep cabling as short as possible.

The CrossLink TG can be mounted horizontally, vertically, or in any convenient orientation, but it is advisable to maintain the indicator lights in sight, since that can become an advantage when troubleshooting the unit.

2 metal brackets are affixed to the unit to assist installation.

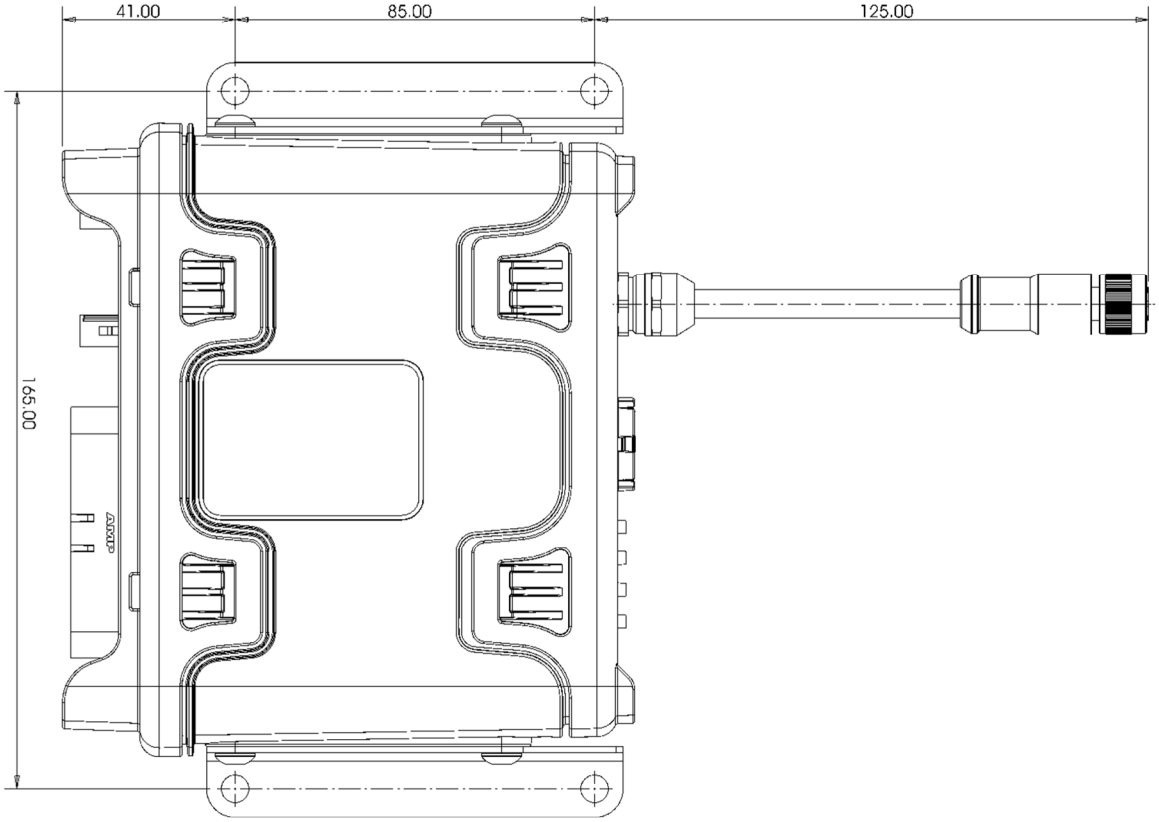

Take care not to blind the internal antenna as this will impede the function of the device, placing the brackets in the upper side of the CrossLink TG, so that the antenna has an open view. See the "satellites up" signal in one the sides to guide on the installation of the fixing units, as this signal must have the open view.

11. Technical Information

Item	Specification
Processing Capacity	32 bits CORTEX A8 core at 800MHz
Available Memory for user	About 800 MB Flash, 450 MB RAM

11.1. Mechanical Information

Item	Specification
Dimensions (mm.)	150(W)x58(H)x135(L)
Weight	400 gr
Material	Glass reinforced plastic
Connectors	Machine, USB, RJ45, SIM Card Holder, Battery, µSD card holder

11.2. Power Interfaces

Item	Specification
Power supply	9 to 48 Vdc

Power Mode	Specification
RUN	43 *
RUN + ETH connected	56
RUN + GNSS	54
RUN + GSM	52
RUN + GSM + GNSS	63
RUN + GSM on call	76
STANDBY	14.27
OFF	0.2

Power consumption improvement can be achieved by switching down Ethernet when it is not needed, for a gain of 6mA@24V, in order to use Ethernet again, a system reboot is required.

11.3. GSM/GPRS UMTS/HSPA+ Specifications

Item	Specification
Frequency bands	Quad Band: GSM 850/ EGSM900 / GSM1800/ GSM1900. Five Band: 800/850/900/1900/2100MHz
Power	2 Watt at GSM850/EGSM900 and 1 Watt at GSM1800/GSM 1900
GPRS	Class B, Class 10 (4+2)
Operations	Audio calls, Data calls, Short Message Service
SIM	Integrated holder, 3 V
Antenna Connector	Fakra plug Male type D

11.4. GNSS Specifications

Item	Specification
Receiver	72-channel, GPS L1C/A SBAS L1C/A QZSS L1C/A GLONASS L1C BeiDou B1 GALILEO E1B/C SBAS: WAAS, EGNOS, MSAS, GAGAN
Update Rate	10Hz or 5Hz if received more than one satellite system
Accuracy	2 meters CEP
Signal Acquisition	Cold Start: 26 sec, Hot Start: 1.5 s, Signal Reacquisition: < 1 sec
Datum	WGS-84
Sensitivity	Tracking & reacquisition: -167 dBm, Cold

	start: -148 dBm
Operational limits	Speed: 500 m/s (972 knots), Altitude: 50,000 m
Antenna Connector	FAKRA plug Male Type C
Antenna Requirements	Active antenna. Impedance: 50Ω Active Antenna recommended gain:15dB Frequency: 1575.42MHz, VSWR: Max 2.0:1
Active antenna detection circuitry	Active Antenna Power Supply: +3.0V @ 30mA current

11.5. Environmental Specifications

Item	Specification
Operating Temperature GSM off	-40 °C to +85 °C
Operating Temperature GSM on	-30 °C to +80°C
Storage Temperature	-40°C to +85 °C
With Li-Ion Battery option fitted	-20°C to +60 °C
Li-Ion Battery recharge	0°C to +45 °C
Operating Temperature GSM off	-40 °C to +85 °C
Operating Temperature GSM on	-30 °C to +80°C
Storage Temperature	-40°C to +85 °C
With Li-Ion Battery option fitted	-20°C to +60 °C
Li-Ion Battery recharge	0°C to +45 °C

11.6. Battery Backup

Item	Specification
Time to recharge	3.5 hours
Charging temperature range	0 °C to 45 °C
Duration @ 25°C	Run Mode: 14 hours, Deep Sleep Mode: 9k hours
Cell type	Lithium Ion 3350mAh and 13400mAh
Discharging temperature range	-20 °C to+ 60 °C
Item	Specification
Time to recharge	3.5 hours
Charging temperature range	0 °C to 45 °C
Duration @ 25°C	Run Mode: 14 hours

12. References

For more information please consult the CrossLink TG Programmer and Software Manual