RS9113

Module Integration Guide

Version 2.2

October 2014

Redpine Signals, Inc.
2107 N. First Street, #680
San Jose, CA 95131.
Tel: (408) 748-3385
Fax: (408) 705-2019
Email: info@redpinesignals.com
Website: www.redpinesignals.com

Disclaimer:

The information in this document pertains to information related to Redpine Signals, Inc. products. This information is provided as a service to our customers, and may be used for information purposes only. Redpine assumes no liabilities or responsibilities for errors or omissions in this document. This document may be changed at any time at Redpine's sole discretion without any prior notice to anyone. Redpine is not committed to updating this document in the future.
Copyright © 2014 Redpine Signals, Inc. All rights reserved

About this Document

The RS9113 module is a Wi-Fi, Bluetooth and ZigBee combo module. It is a dual-band 802.11n single-stream module with built-in MAC/BBP, RF and PA, and front-end components. It interfaces to a host processor through SDIO, SPI, UART or USB interfaces. This document provides information that may be used while integrating the module into an end-to-end solution.

This document includes RS9113 interfacing schematics describing the supported host interfaces and the other corresponding circuitry, along with the BOM.

Table Of Contents

1 RS9113 module with integrated antenna 7
1.1 System Block Diagram 7
1.2 Reference Schematics and BOM 8
1.2.1 SDIO mode Interface Schematic (Input supply – 1.8V) 9
1.2.1.1 Bill of Materials for SDIO mode (Input supply – 1.8V) 10
1.2.2 SDIO mode Interface Schematic (Input supply – 3.3V) 12
1.2.2.1 Bill of Materials for SDIO mode (Input supply – 3.3V) 13
1.2.3 SPI mode Interface Schematic 15
1.2.3.1 Bill of Materials for SPI mode 17
1.2.4 USB mode Interface Schematic 19
1.2.4.1 Bill of Materials for USB mode 20
1.2.5 USB CDC mode Interface Schematic 22
1.2.5.1 Bill of Materials for USB CDC mode 23
1.2.6 UART mode Interface Schematic 25
1.2.6.1 Bill of Materials for UART Mode 26
1.3 Recommended PCB Landing Pattern 28
1.4 Circuit and Layout Guidelines 29
1.5 Sample Layout in SDIO mode 30
1.5.1 Top Layer 30
1.5.2 Bottom Layer 31
1.5.3 Component Placement 32
1.6 u.FL Connector for External Antenna 33
2 RS9113 module without integrated antenna 35
2.1 System Block Diagram 35
2.2 Reference Schematics and BOM 36
2.2.1 SDIO mode Interface Schematic (Input supply – 1.8V) 37
2.2.1.1 Bill of Materials for SDIO mode (Input supply – 1.8V) 38
2.2.2 SDIO mode Interface Schematic (Input supply – 3.3V) 40
2.2.2.1 Bill of Materials for SDIO mode (Input supply – 3.3V) 41
2.2.3 SPI mode Interface Schematic 43
2.2.3.1 Bill of Materials for SPI mode 44
2.2.4 USB mode Interface Schematic 46
2.2.4.1 Bill of Materials for USB mode 47
2.2.5 USB CDC mode Interface Schematic 49
2.2.5.1 Bill of Materials for USB CDC mode 50
2.2.6 UART mode Interface Schematic 52
2.2.6.1 Bill of Materials in UART Mode 53
2.3 Recommended PCB Landing Pattern 55
2.4 Circuit and Layout Guidelines 56
2.5 Antenna Layout Recommendations 56
2.6 Sample layout in SDIO mode 58
2.6.1 Top Layer 58
2.6.2 Layer2 58
2.6.3 Layer3 59
2.6.4 Bottom Layer 59
2.6.5 Component Placement 60

Table of Figures

Figure 1: RS9113 Module with Integrated Antenna 7
Figure 2: SDIO mode Interface Schematic – 1.8V 9
Figure 3: SDIO mode Interface Schematic – 3.3V 12
Figure 4: SPI mode Interface Schematic 15
Figure 5: USB mode Interface Schematic 19
Figure 6 USB CDC Mode Schematics 22
Figure 7: UART mode Interface Schematic 25
Figure 8: PCB Landing Pattern for RS9113 Module with Integrated Antenna 28
Figure 9: Copper Etching Guidelines 29
Figure 10: PCB Top Layer Diagram 30
Figure 11: PCB Bottom Layer Diagram 31
Figure 12 : PCB Component Placement Diagram 32
Figure 13 : u.FL Connector on module [Part no. Hirose U.FL-R-SMT (01)] 33
Figure 14: RS9113 Module without Integrated Antenna 35
Figure 15: SDIO mode Interface Schematic – 1.8V 38
Figure 16: SDIO mode Interface Schematic – 3.3V 40
Figure 18: USB mode Interface Schematic 47
Figure 19 USB CDC Mode Interface Schematics 49
Figure 20: UART mode Interface Schematic 52
Figure 21: PCB Landing Pattern for 9113 Module without Integrated Antenna 55
Figure 22: Chip Antenna Layout Recommendations 57
Figure 23: PCB Top Layer Diagram 58
Figure 24: PCB Layer2 Diagram 58
Figure 25: PCB Layer3 Diagram 59
Figure 26: PCB Bottom Layer Diagram 59
Figure 27: PCB Component Placement Diagram 60

Table of Tables

Table 1: Host Interface Selection 8
Table 2: Bill of Material for SDIO mode (Input supply – 1.8V) 11
Table 3: Bill of Material for SDIO mode (Input supply – 3.3V) 14
Table 4: Bill of Material for SPI mode 18
Table 5: Bill of Material for USB mode 21
Table 6 Bill Of Material for USB CDC Mode.....24
Table 7: Bill of Material for UART mode 27
Table 8: Host Interface Selection 36
Table 9: Bill of Material for SDIO mode (Input supply – 1.8V) 39
Table 10: Bill of Material for SDIO mode (Input supply – 3.3 V).....42
Table 11: Bill of Material for SPI mode 45
Table 12: Bill of Material for USB mode 48
Table 13 Bill of Material for USB CDC Mode 51
Table 14: Bill of Material for UART mode 54

1 RS9113 module with integrated antenna

In The following sections, we present reference circuit schematics, BOM, Recommended PCB Landing Pattern, Circuit and Layout Guidelines along with a Sample layout of an Evaluation Board using the RS9113 based module with an integrated PCB antenna. The schematics are shown for SDIO, SPI, UART and USB host interface options. The layout corresponding to this schematic is also shown in this document as a reference.

1.1 System Block Diagram

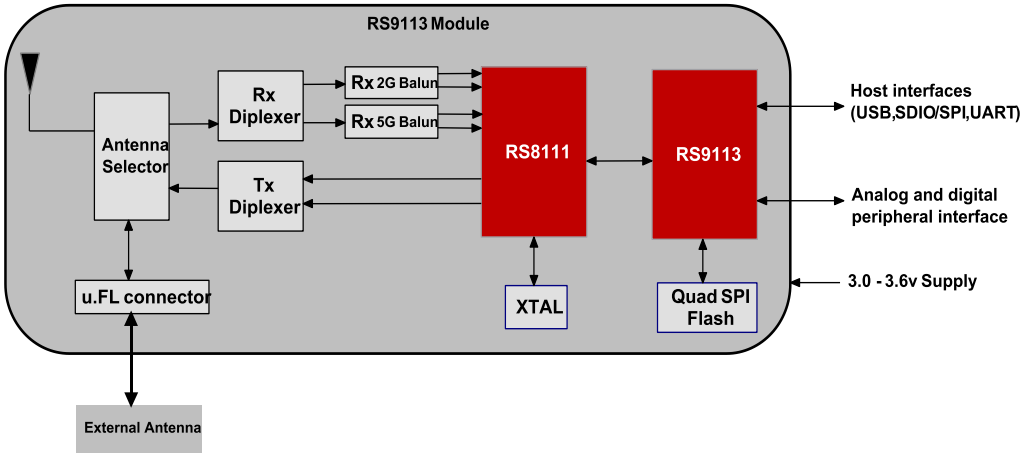

Figure 1: RS9113 Module with Integrated Antenna

1.2 Reference Schematics and BOM

The default values of all the GPIO pins on powering up RS9113 will be set to HIGH and are configured as Output.

The following table describes the host interface mode selection for WiSeConnect and Connect-io-n family by using pull resistors on HOST_SEL_1 and HOST_SEL_0 pins. Internally, both the pins are pulled high.

Note: Host select pin configuration as shown in the table below for UART is applicable for WiSeConnect/Connect-io-n module families. For n-Link module family, UART shall function in conjunction with SPI/SDIO/USB irrespective of Host select pins configuration.

Mode	HOST_SEL_1	HOST_SEL_0
UART	0	0
SPI	1	0
USB	0	1
SDIO	1	1

Table 1: Host Interface Selection

1.2.1 Power Supply

It is recommended to have a tightly regulated power supply which is 3.3V +/- 5% and can handle a continuous current of 500mA. As a general practice it is always suggested to have a 30% buffer on current rating of the power supply.

1.2.2 SDIO mode Interface Schematic (Input supply – 1.8V)

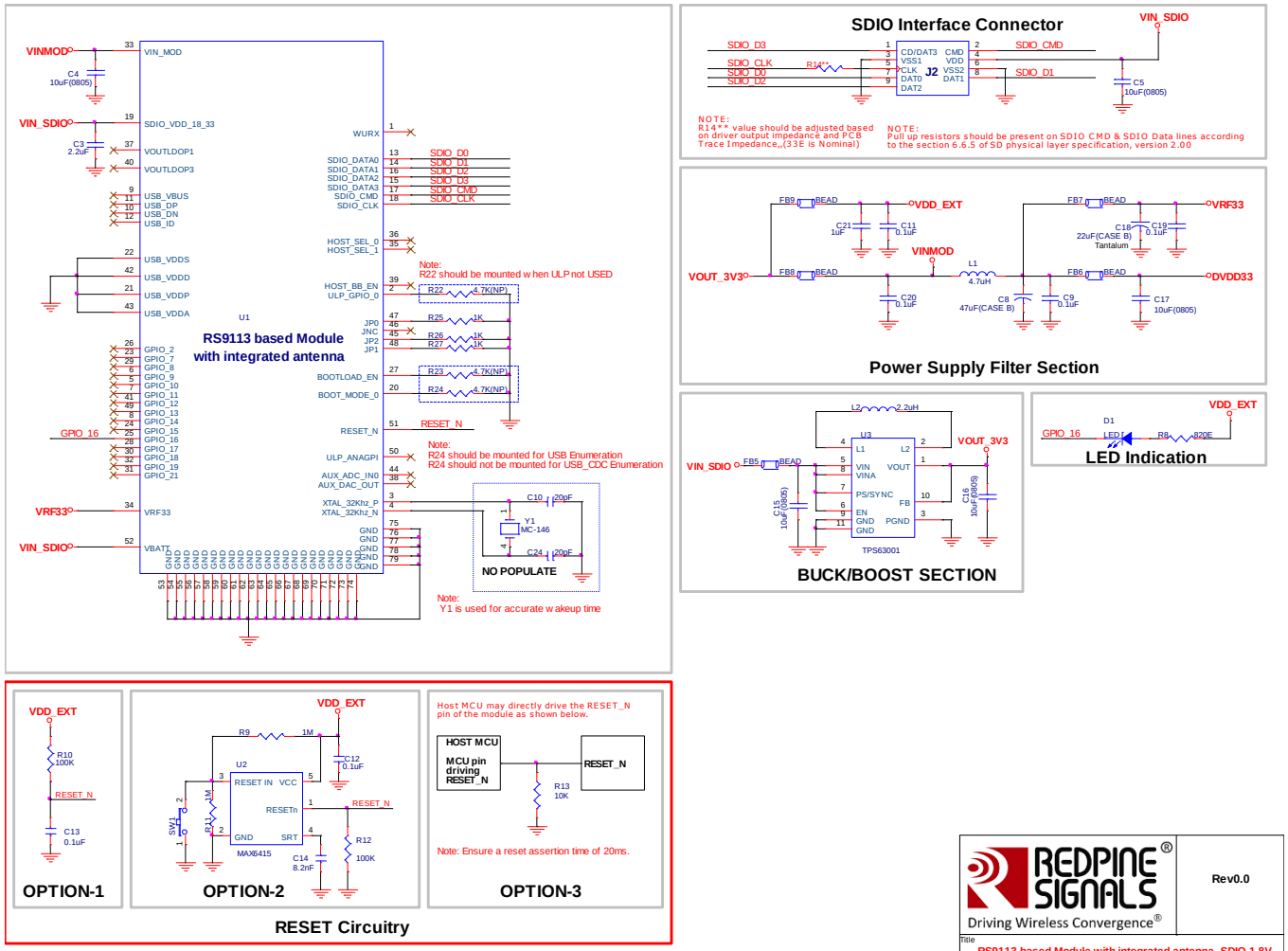

Figure 2: SDIO mode Interface Schematic – 1.8V

1.2.2.1 Bill of Materials for SDIO mode (Input supply – 1.8V)

Item	Qty	Reference	Part Value	Description	Jedec	Mfg	Part No
CAPACITORS							
1	4	C9,C19,C11,C20	0.1uF	CER CHIP C 0.1U 10% X5R 0402 10V	0402	Murata	GRM155R61A104KA01D
2	1	C3	2.2uF	CER CHIP C 2.2U 20% X5R 0402 4V	0402	Murata	GRM155R60G225ME15D
4	1	C21	1uF	CAP CER 1UF 10V 10% X5R 0402	0402	Murata	GRM155R61A105KE15D
5	5	C4,C5,C15,C16,C17	10uF	CER CHIP C 10U 20% X5R 0805 10V	0805	Murata	GRM21BR61A106KE19L
6	1	C18	22uF	CAP TANT 22uF 10V 10%	Case B	AVX	TAJB226K006RNJ
7	1	C8	47uF	CAP TANT 47UF 6.3V 10%	Case B	AVX	TAJB476K006RNJ
RESISTORS							
8	1	R14**	33E	CHIP RES 33R 5% 200PPM 0402 1/10W	0402	Panasonic	ERJ-2GEJ330X
9	1	R8	820E	CHIP RES 820R 5% 200PPM 0402 1/10W	0402	Panasonic	ERJ-2GEJ821X
10	3	R22,R23,R24	4.7K	CHIP RES 4K7 5% 200PPM 0402 1/10W	0402	Panasonic	ERJ-2GEJ472X
11	3	R25,R26,R27	1K	RES 1.0K OHM 1/16W 5% 0402 SMD	0402	Yageo	RC0402JR-071KL
INDUCTORS							
12	1	L1	4.7uH	Power Inductor	SMD	FDK	MIPF2520D4R7
13	1	L2	2.2uH	Power Inductor	1212	Murata	LQH3NPN2R2NG0L
14	5	FB5,FB6,FB7,FB8,FB9	BEAD	FILTER CHIP 120 OHM 1.5A 0402	0402	Murata	BLM15EG121SN1D
DIODES							
15	1	D1	LED	Green LED	0603	Lite-On Inc	LTST-C190KGKT
IC'S							
16	1	U1	B1-301	RS9113-B1-03 Module		Redpine	RS9113-B1-301
17	1	U3	TPS63001	Buck-Boost Regulator	QFN-10	Texas	TPS63001DRC
Miscellaneous							
18	1	J2	Con	SDIO Interface Card Edge Connector	SMD		
Optional							
19	2	C10,C24	20pF	CAP CER 20PF 25V 5% NP0	0402	Murata	GRM1555C1E200JZ01D
20	1	C14	8.2nF	CAP CER 3900PF 50V 10% X7R	0402	Murata	GRM155R71H392KA01D
21	2	C12,C13	0.1uF	CER CHIP C 0.1U 10% X5R 0402 10V	0402	Murata	GRM155R61A104KA01D
22	1	R13	10K	CHIP RES 10K 5% 200PPM 0402 1/10W	0402	Panasonic	ERJ-2GEJ103X
23	2	R10,R12	100K	CHIP RES 100K 5% 200PPM 0402 1/10W	0402	Panasonic	ERJ-2GEJ104X

24	2	R9,R11	1M	CHIP RES 1M 5% 200PPM 0402 1/10W	0402	Panasonic	ERJ-2GEJ105X
25	1	SW1	sw	SWITCH TACTILE SPST-NO 0.02A 15V	SMD	ALPS	SKRAAKE010
26	1	U2	Reset	IC MPU/Reset circuit	SOT23-5	Maxim	MAX6415UK-T
27	1	Y1	Crystal	CRYSTAL 32.768KHZ 9PF SMD	SMD	Epson	MC-146 32.768000kHz 12.5

Table 2: Bill of Material for SDIO mode (Input supply – 1.8V)

1.2.3 SDIO mode Interface Schematic (Input supply – 3.3V)

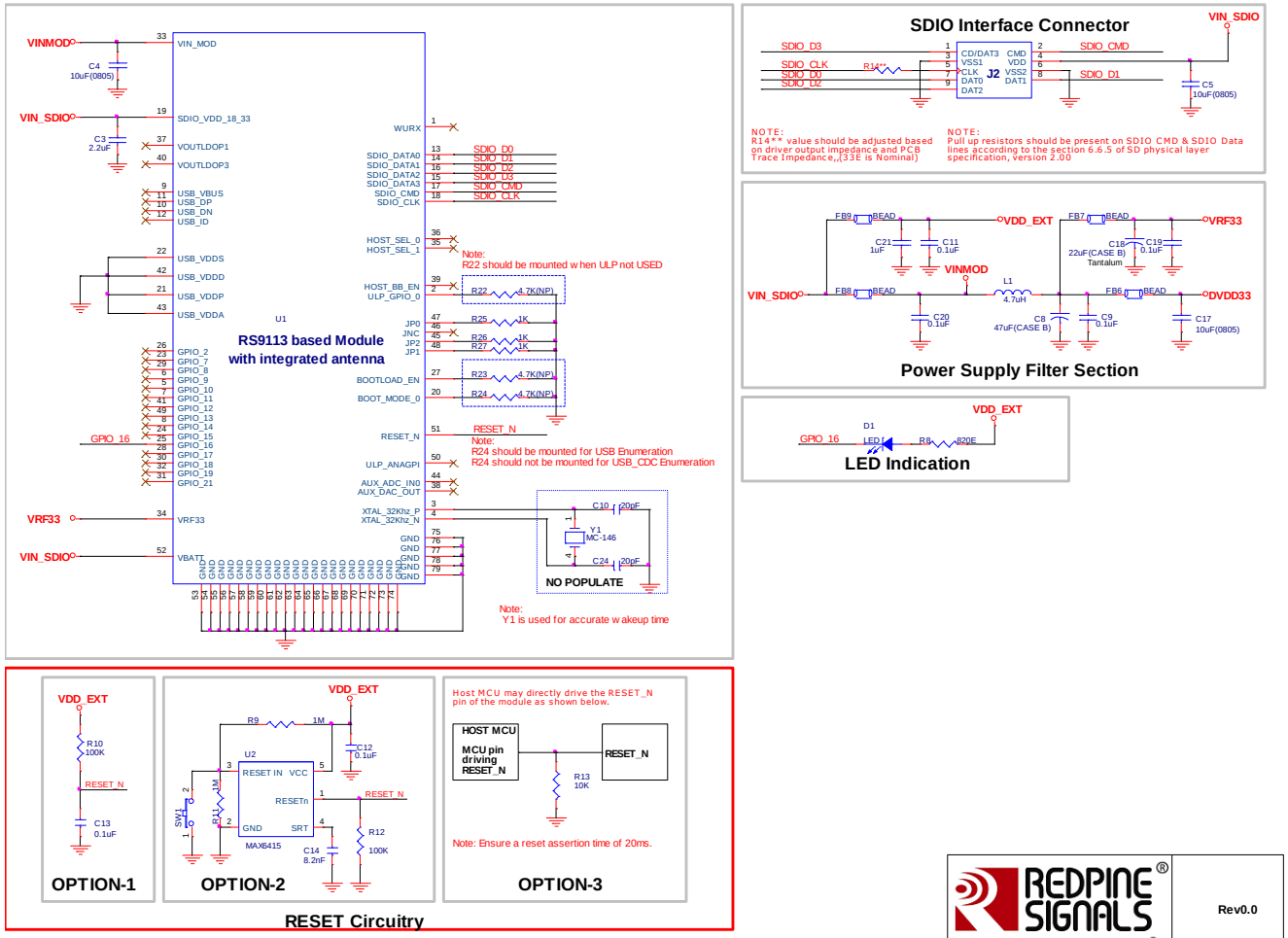

Figure 3: SDIO mode Interface Schematic – 3.3V

NOTE: Pull up resistors should be present on SDIO_CMD & SDIO_Data lines according to SDIO physical layer specification, version 2.00.

1.2.3.1 Bill of Materials for SDIO mode (Input supply – 3.3V)

Item	Qty	Reference	Part Value	Description	Jedec	Mfg	Part No
CAPACITORS							
1	4	C9,C19,C11,C20	0.1uF	CER CHIP C 0.1U 10% X5R 0402 10V	0402	Murata	GRM155R61A104KA01D
4	1	C21	1uF	CAP CER 1UF 10V 10% X5R 0402	0402	Murata	GRM155R61A105KE15D
2	1	C3	2.2uF	CER CHIP C 2.2U 20% X5R 0402 4V	0402	Murata	GRM155R60G225ME15D
3	3	C4,C5,C17	10uF	CER CHIP C 10U 20% X5R 0805 10V	0805	Murata	GRM21BR61A106KE19L
5	1	C18	22uF	CAP TANT 22uF 10V 10%	Case B	AVX	TAJB226K006RNJ
6	1	C8	47uF	CAP TANT 47UF 6.3V 10%	Case B	AVX	TAJB476K006RNJ
RESISTORS							
7	1	R14**	33E	CHIP RES 33R 5% 200PPM 0402 1/10W	0402	Panasonic	ERJ-2GEJ330X
8	1	R8	820E	CHIP RES 820R 5% 200PPM 0402 1/10W	0402	Panasonic	ERJ-2GEJ821X
9	3	R22,R23,R24	4.7K	CHIP RES 4K7 5% 200PPM 0402 1/10W	0402	Panasonic	ERJ-2GEJ472X
10	3	R25,R26,R27	1K	RES 1.0K OHM 1/16W 5% 0402 SMD	0402	Yageo	RC0402JR-071KL
INDUCTORS							
11	1	L1	4.7uH	Power Inductor	SMD	FDK	MIPF2520D4R7
12	4	FB6,FB7,FB8,FB9	BEAD	FILTER CHIP 120 OHM 1.5A 0402	0402	Murata	BLM15EG121SN1D
DIODES							
13	1	D1	LED	Green LED	0603	Lite-On Inc	LTST-C190KGKT
IC'S							
14	1	U1	B1-301	RS9113-B1-03 Module		Redpine	RS9113-B1-301
Miscellaneous							
15	1	J2	Con	SDIO Interface Card Edge Connector	SMD		
Optional							
16	2	C10,C24	20pF	CAP CER 20PF 25V 5% NP0	0402	Murata	GRM1555C1E200JZ01D
17	1	C14	3.9nF	CAP CER 3900PF 50V 10% X7R	0402	Murata	GRM155R71H392KA01D
18	2	C12,C13	0.1uF	CER CHIP C 0.1U 10% X5R 0402 10V	0402	Murata	GRM155R61A104KA01D
19	1	R13	10K	CHIP RES 10K 5% 200PPM 0402 1/10W	0402	Panasonic	ERJ-2GEJ103X

20	2	R10,R12	100K	CHIP RES 100K 5% 200PPM 0402 1/10W	0402	Panasonic	ERJ-2GEJ104X
21	2	R9,R11	1M	CHIP RES 1M 5% 200PPM 0402 1/10W	0402	Panasonic	ERJ-2GEJ105X
22	1	SW1	sw	SWITCH TACTILE SPST-NO 0.02A 15V	SMD	ALPS	SKRAAKE010
23	1	U2	Reset	IC MPU/Reset circuit	SOT23-5	Maxim	MAX6415UK-T
24	1	Y1	Crystal	CRYSTAL 32.768KHZ 9PF SMD	SMD	Epson	MC-146 32.768000kHz 12.5

Table 3: Bill of Material for SDIO mode (Input supply – 3.3V)

1.2.4 SPI mode Interface Schematic

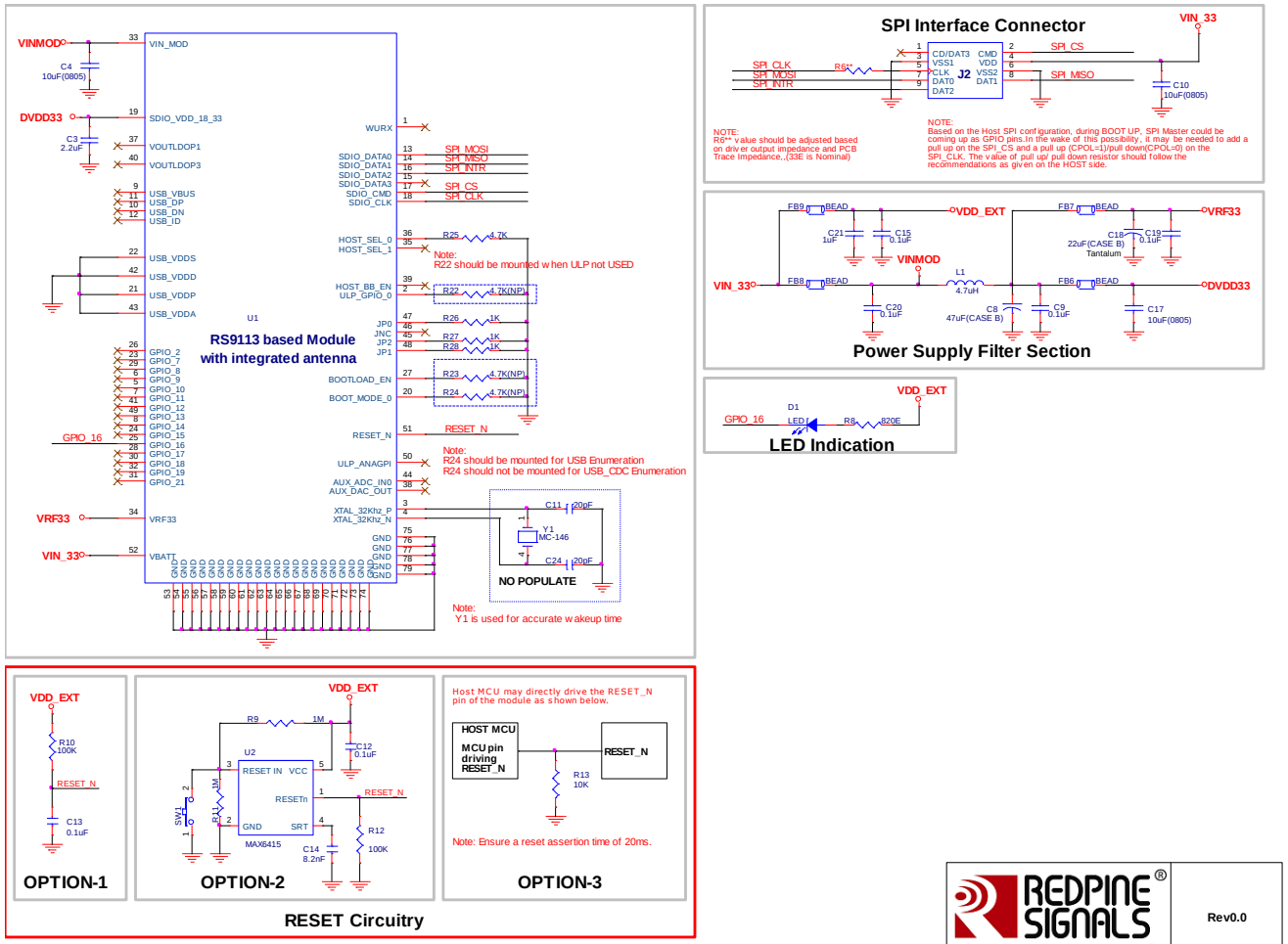

Redpine Signals Confidential

Rev0.0

Title: RS9113 based Module with integrated antenna -SPI

Size | Document Number | Rev

Date: | Sheet 1 of 1

Figure 4: SPI mode Interface Schematic

SPI mode interface connection recommendations:

For SPI communication, the host MCU which acts as a Master is connected over SPI interface to the wireless module which acts as a slave. The following recommendations describe hardware connections between master and slave for SPI communication. They have to be implemented on the host MCU.

- SPI_CS: The SPI_CS is a chip-select signal driven by the host. The host should be programmed such that on powering it up, this signal should be driven HIGH. If not, a pull-up resistor is recommended to be connected on this line.
- SPI_CLK: A clock output from the SPI master component carries the serial clock to the slave. Based on the configuration of clock polarity (CPOL) mode in the host MCU, a pull-up (for CPOL=1) or a pull-down (for CPOL=0) resistor is recommended to be connected on this line.
- SPI_INTR: The SPI_INTR is the interrupt signal driven by the RS9113 module to the host MCU .There are two possibilities based on which pull-up/pull-down is recommended to be connected on this signal.
    - Active high/Leading edge interrupt mode: Connect a pull-down resistor.
    - Active low/Trailing edge interrupt mode: Connect a pull-up resistor.

  Pull resistors can be avoided if the following programming sequence is followed:
    - Program 9113 interrupt mode through bootloader.
    - Enable interrupt in host MCU.

  The host can be programmed such that the interrupt signal has to be in disabled state till interrupt mode (active HIGH or LOW) is selected.

Note: Pull resistors on SPI_CS (Chip Select) and SPI_CLK (Serial Clock) can be avoided if the host executes the following sequence.

- On power up the RS9113 module is assumed to be in reset mode. Then, initialize the SPI master on the host MCU.
- Release the RS9113 module out of reset mode.

Specific values of pull resistors should follow host recommendations.

1.2.4.1 Bill of Materials for SPI mode

Item	Qty	Reference	Part Value	Description	Jedec	Mfg	Part No
CAPACITORS							
1	4	C9,C19,C15,C20	0.1uF	CER CHIP C 0.1U 10% X5R 0402 10V	0402	Murata	GRM155R61A104KA01D
4	1	C21	1uF	CAP CER 1UF 10V 10% X5R 0402	0402	Murata	GRM155R61A105KE15D
2	1	C3	2.2uF	CER CHIP C 2.2U 20% X5R 0402 4V	0402	Murata	GRM155R60G225ME15D
3	3	C4,C10,C17	10uF	CER CHIP C 10U 20% X5R 0805 10V	0805	Murata	GRM21BR61A106KE19L
5	1	C18	22uF	CAP TANT 22uF 10V 10%	Case B	AVX	TAJB226K006RNJ
6	1	C8	47uF	CAP TANT 47UF 6.3V 10%	Case B	AVX	TAJB476K006RNJ
RESISTORS							
7	1	R6**	33E	CHIP RES 33R 5% 200PPM 0402 1/10W	0402	Panasonic	ERJ-2GEJ330X
8	1	R8	820E	CHIP RES 820R 5% 200PPM 0402 1/10W	0402	Panasonic	ERJ-2GEJ821X
9	3	R26,R27.R28	1K	RES 1.0K OHM 1/16W 5% 0402 SMD	0402	Yageo	RC0402JR-071KL
10	3	R22,R23,R24	4.7K	RES 1.0K OHM 1/16W 5% 0402 SMD	0402	Yageo	RC0402JR-071KL
11	1	R25	4.7K	CHIP RES 4K7 5% 200PPM 0402 1/10W	0402	Panasonic	ERJ-2GEJ472X
INDUCTORS							
12	1	L1	4.7uH	Power Inductor	SMD	FDK	MIPF2520D4R7
13	4	FB6,FB7,FB8,FB9	BEAD	FILTER CHIP 120 OHM 1.5A 0402	0402	Murata	BLM15EG121SN1D
DIODES							
14	1	D1	LED	Green LED	0603	Lite-On Inc	LTST-C190KGKT
IC'S							
15	1	U1	B1-301	RS9113-B1-301 Module		Redpine	RS9113-B1-301
Miscellaneous							
16	1	J2	Header	5X2 Berg Header	DIP	Berg	
Optional							
17	2	C11,C24	20pF	CAP CER 20PF 25V 5% NP0	0402	Murata	GRM1555C1E200JZ01D
18	1	C14	8.2nF	CAP CER 3900PF 50V 10% X7R	0402	Murata	GRM155R71H392KA01D
19	2	C12,C13	0.1uF	CER CHIP C 0.1U 10% X5R 0402 10V	0402	Murata	GRM155R61A104KA01D
20	1	R13	10K	CHIP RES 10K 5% 200PPM 0402 1/10W	0402	Panasonic	ERJ-2GEJ103X
21	2	R10,R12	100K	CHIP RES 100K 5% 200PPM 0402 1/10W	0402	Panasonic	ERJ-2GEJ104X

22	2	R9,R11	1M	CHIP RES 1M 5% 200PPM 0402 1/10W	0402	Panasonic	ERJ-2GEJ105X
23	1	SW1	sw1	SWITCH TACTILE SPST-NO 0.02A 15V	SMD	ALPS	SKRAAKE010
24	1	U2	Reset	IC MPU/Reset circuit	SOT23-5	Maxim	MAX6415UK-T
25	1	Y1	Crystal	CRYSTAL 32.768KHZ 9PF SMD	SMD	Epson	MC-146 32.768000kHz 12.5

Table 4: Bill of Material for SPI mode

1.2.5 USB mode Interface Schematic

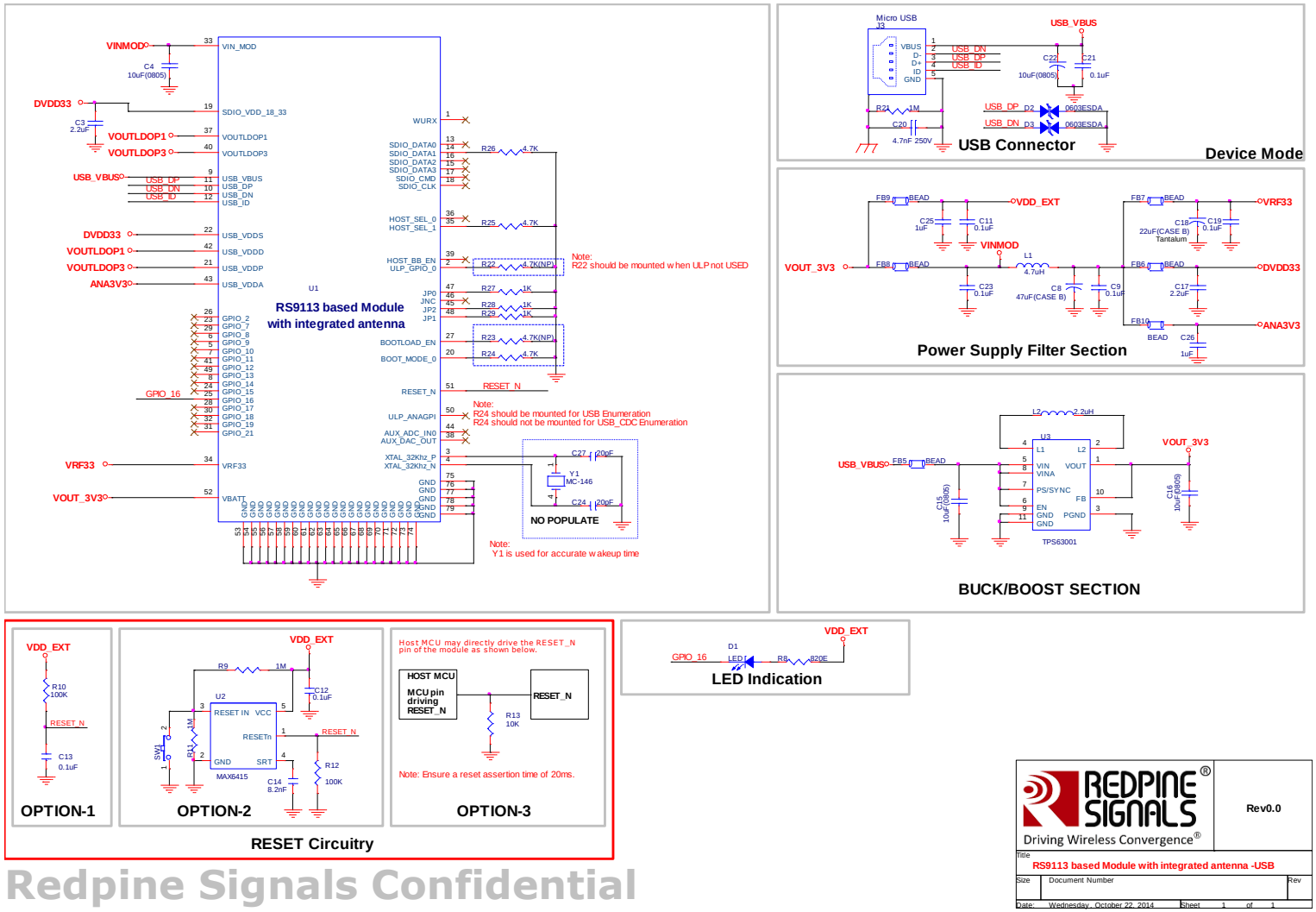

Figure 5: USB mode Interface Schematic

1.2.5.1 Bill of Materials for USB mode

Item	Qty	Reference	Part Value	Description	Jedec	Mfg	Part No
CAPACITORS							
1	3	C9,C19,C21,C11,C23	0.1uF	CER CHIP C 0.1U 10% X5R 0402 10V	0402	Murata	GRM155R61A104KA01D
3	1	C20	4.7nF 250V	CAP CER 4700PF 100V 10% X7R 0805	0805	Murata	GRM219R72A472KA01D
22	2	C25,C26	1uF	CAP CER 1UF 10V 10% X5R 0402	0402	Murata	GRM155R61A105KE15D
2	1	C3,C17	2.2uF	CER CHIP C 2.2U 20% X5R 0402 4V	0402	Murata	GRM155R60G225ME15D
5	4	C4,C15,C16,C22	10uF	CER CHIP C 10U 20% X5R 0805 10V	0805	Murata	GRM21BR61A106KE19L
6	1	C18	22uF	CAP TANT 22uF 10V 10%	Case B	AVX	TAJB226K006RNJ
7	1	C8	47uF	CAP TANT 47UF 6.3V 10%	Case B	AVX	TAJB476K006RNJ
RESISTORS							
8	1	R8	820E	CHIP RES 820R 5% 200PPM 0402 1/10W	0402	Panasonic	ERJ-2GEJ821X
9	3	R27,R28,R29	1K	RES 1.0K OHM 1/16W 5% 0402 SMD	0402	Yageo	RC0402JR-071KL
10	4	R22,R23,R24,R25,R26	4.7K	CHIP RES 4K7 5% 200PPM 0402 1/10W	0402	Panasonic	ERJ-2GEJ472X
11	1	R21	1M	CHIP RES 1M 5% 200PPM 0402 1/10W	0402	Panasonic	ERJ-2GEJ105X
INDUCTORS							
12	1	L1	4.7uH	Power Inductor	SMD	FDK	MIPF2520D4R7
13	1	L2	2.2uH	Power Inductor	1212	Murata	LQH3NPN2R2NG0L
14	3	FB5,FB6,FB7,FB8,FB9,FB10	BEAD	FILTER CHIP 120 OHM 1.5A 0402	0402	Murata	BLM15EG121SN1D
DIODES							
15	1	D1	LED	Green LED	0603	Lite-On Inc	LTST-C190KGKT
16	2	D2,D3	0603ESDA	ESD Suppressor	0603	CooperBussmann	0603ESDA-MLP
IC'S							
17	1	U1	B1-301	RS9113-B1-301 Module		Redpine	RS9113-B1-031
18	1	U3	TPS63001	Buck-Boost Regulator	QFN-10	Texas	TPS63001DRC
Miscellaneous							
19	1	J3	USB	Micro USB	SMD	Molex	54819-0572
20	2	C24,27	20pF	CAP CER 20PF 25V 5% NP0	0402	Murata	GRM1555C1E200JZ01D
Optional							
21	1	C14	8.2nF				

24	2	C12,C13	0.1uF	CER CHIP C 0.1U 10% X5R 0402 10V	0402	Murata	GRM155R61A104KA01D
25	1	R13	10K	CHIP RES 10K 5% 200PPM 0402 1/10W	0402	Panasonic	ERJ-2GEJ103X
26	2	R10,R12	100K	CHIP RES 100K 5% 200PPM 0402 1/10W	0402	Panasonic	ERJ-2GEJ104X
27	2	R9,R11	1M	CHIP RES 1M 5% 200PPM 0402 1/10W	0402	Panasonic	ERJ-2GEJ105X
28	1	SW1	sw	SWITCH TACTILE SPST-NO 0.02A 15V	SMD	ALPS	SKRAAKE010
29	1	U2	Reset	IC MPU/Reset circuit	SOT23-5	Maxim	MAX6415UK-T
30	1	Y1	Crystal	CRYSTAL 32.768KHZ 9PF SMD	SMD	Epson	MC-146 32.768000kHz 12.5

Table 5: Bill of Material for USB mode

1.2.6 USB CDC mode Interface Schematic

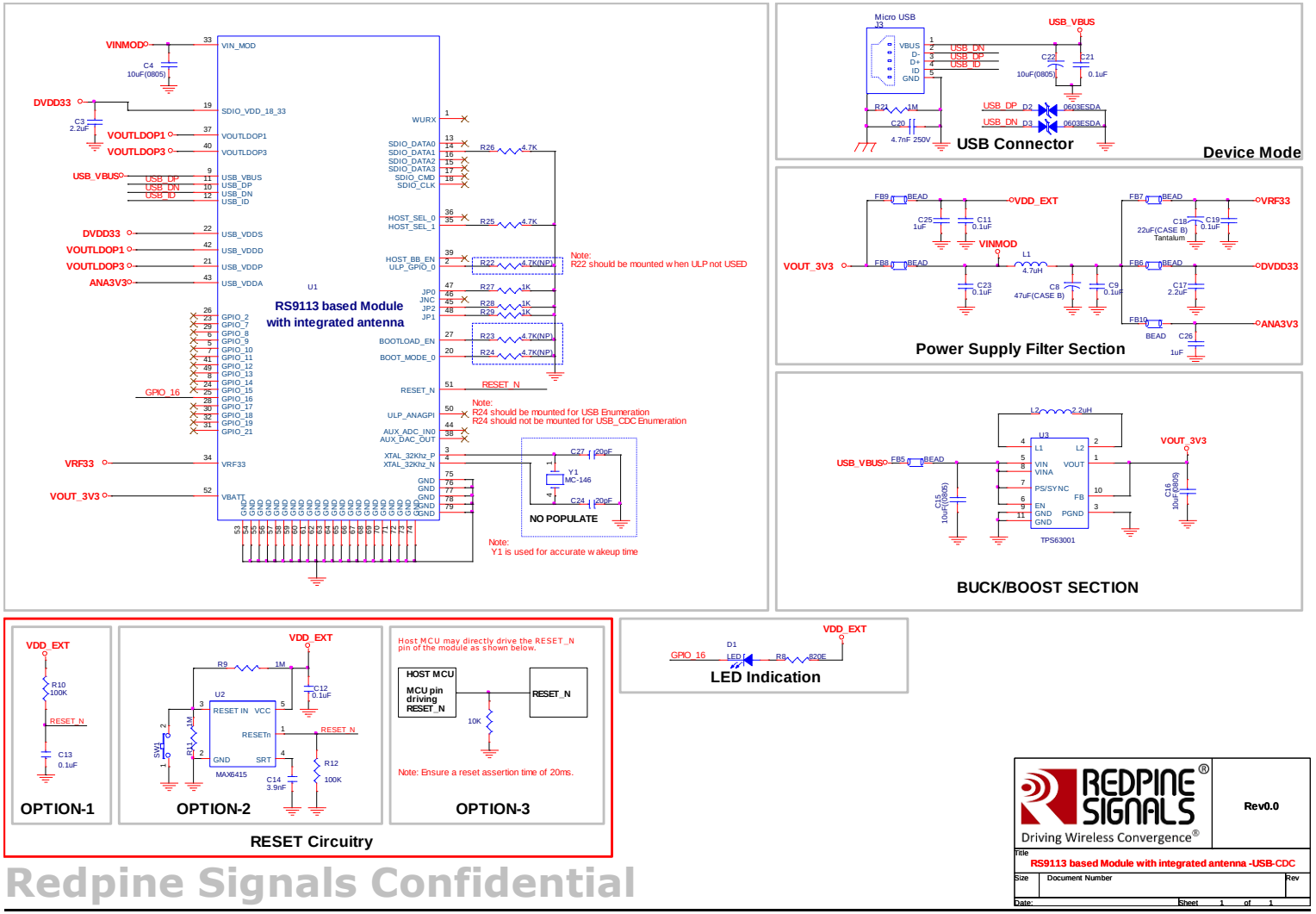

Figure 6 USB CDC Mode Schematics

1.2.6.1 Bill of Materials for USB CDC mode

Item	Qty	Reference	Part Value	Description	Jedec	Mfg	Part No
CAPACITORS							
1	3	C9,C19,C21,C11,C23	0.1uF	CER CHIP C 0.1U 10% X5R 0402 10V	0402	Murata	GRM155R61A104KA01D
2	1	C20	4.7nF 250V	CAP CER 4700PF 100V 10% X7R 0805	0805	Murata	GRM219R72A472KA01D
3	2	C25,C26	1uF	CAP CER 1UF 10V 10% X5R 0402	0402	Murata	GRM155R61A105KE15D
4	1	C3,C17	2.2uF	CER CHIP C 2.2U 20% X5R 0402 4V	0402	Murata	GRM155R60G225ME15D
5	4	C4,C15,C16,C22	10uF	CER CHIP C 10U 20% X5R 0805 10V	0805	Murata	GRM21BR61A106KE19L
6	1	C18	22uF	CAP TANT 22uF 10V 10%	Case B	AVX	TAJB226K006RNJ
7	1	C8	47uF	CAP TANT 47UF 6.3V 10%	Case B	AVX	TAJB476K006RNJ
RESISTORS							
8	1	R8	820E	CHIP RES 820R 5% 200PPM 0402 1/10W	0402	Panasonic	ERJ-2GEJ821X
9	3	R27,R28,R29	1K	RES 1.0K OHM 1/16W 5% 0402 SMD	0402	Yageo	RC0402JR-071KL
10	4	R22,R23,R25,R26	4.7K	CHIP RES 4K7 5% 200PPM 0402 1/10W	0402	Panasonic	ERJ-2GEJ472X
11	1	R21	1M	CHIP RES 1M 5% 200PPM 0402 1/10W	0402	Panasonic	ERJ-2GEJ105X
INDUCTORS							
12	1	L1	4.7uH	Power Inductor	SMD	FDK	MIPF2520D4R7
13	1	L2	2.2uH	Power Inductor	1212	Murata	LQH3NPN2R2NG0L
14	3	FB5,FB6,FB7,FB8,FB9,FB10	BEAD	FILTER CHIP 120 OHM 1.5A 0402	0402	Murata	BLM15EG121SN1D
DIODES							
15	1	D1	LED	Green LED	0603	Lite-On Inc	LTST-C190KGKT
16	2	D2,D3	0603ESDA	ESD Suppressor	0603	CooperBussmann	0603ESDA-MLP
IC'S							
17	1	U1	B1-301	RS9113-B1-301 Module		Redpine	RS9113-B1-031
18	1	U3	TPS63001	Buck-Boost Regulator	QFN-10	Texas	TPS63001DRC
Miscellaneous							
19	1	J3	USB	Micro USB	SMD	Molex	54819-0572
Optional							
20	2	C24,27	20pF	CAP CER 20PF 25V 5% NP0	0402	Murata	GRM1555C1E200JZ01D
21	1	C14	8.2nF				

22	2	C12,C13	0.1uF	CER CHIP C 0.1U 10% X5R 0402 10V	0402	Murata	GRM155R61A104KA01D
23	1	R24	4.7K	CHIP RES 4K7 5% 200PPM 0402 1/10W	0402	Panasonic	ERJ-2GEJ472X
24	1	R13	10K	CHIP RES 10K 5% 200PPM 0402 1/10W	0402	Panasonic	ERJ-2GEJ103X
25	2	R10,R12	100K	CHIP RES 100K 5% 200PPM 0402 1/10W	0402	Panasonic	ERJ-2GEJ104X
26	2	R9,R11	1M	CHIP RES 1M 5% 200PPM 0402 1/10W	0402	Panasonic	ERJ-2GEJ105X
27	1	SW1	sw	SWITCH TACTILE SPST-NO 0.02A 15V	SMD	ALPS	SKRAAKE010
28	1	U2	Reset	IC MPU/Reset circuit	SOT23-5	Maxim	MAX6415UK-T
29	1	Y1	Crystal	CRYSTAL 32.768KHZ 9PF SMD	SMD	Epson	MC-146 32.768000kHz 12.5

Table 6 Bill Of Material for USB CDC Mode

1.2.7 UART mode Interface Schematic

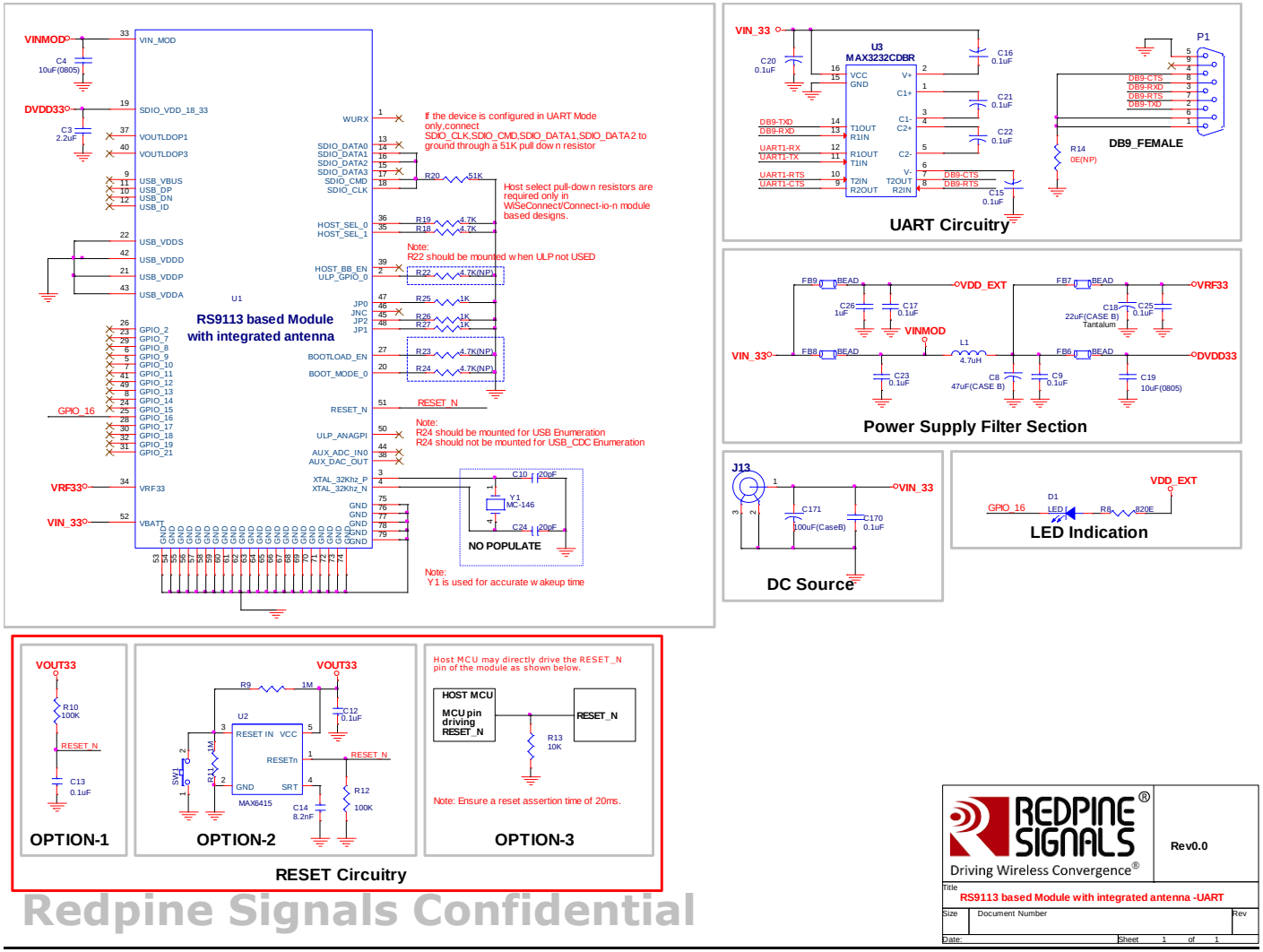

Figure 7: UART mode Interface Schematic

1.2.7.1 Bill of Materials for UART Mode

Item	Qty	Reference	Part Value	Description	Jedec	Mfg	Part No
CAPACITORS							
1	8	C9,C15,C16,C19,C20,C21,C22,C170	0.1uF	CER CHIP C 0.1U 10% X5R 0402 10V	0402	Murata	GRM155R61A104KA01D
2	1	C3	2.2uF	CER CHIP C 2.2U 20% X5R 0402 4V	0402	Murata	GRM155R60G225ME15D
3	2	C4,C17	10uF	CER CHIP C 10U 20% X5R 0805 10V	0805	Murata	GRM21BR61A106KE19L
4	1	C18	22uF	CAP TANT 22uF 10V 10%	Case B	AVX	TAJB226K006RNJ
5	1	C8	47uF	CAP TANT 47UF 6.3V 10%	Case B	AVX	TAJB476K006RNJ
6	1	C171	100uF	CAP TANT 100UF 6.3V 10%	Case B	AVX	TAJB107K006RNJ
RESISTORS							
7	1	R8	820E	CHIP RES 820R 5% 200PPM 0402 1/10W	0402	Panasonic	ERJ-2GEJ821X
8	3	R15,R16,R17	1K	RES 1.0K OHM 1/16W 5% 0402 SMD	0402	Yageo	RC0402JR-071KL
9	2	R18,R19	4.7K	CHIP RES 4K7 5% 200PPM 0402 1/10W	0402	Panasonic	ERJ-2GEJ472X
10	1	R20	51K	CHIP RES 51K 5% 200PPM 0402 1/10W	0402	Panasonic	ERJ-2GEJ513X
INDUCTORS							
11	1	L1	4.7uH	Power Inductor	SMD	FDK	MIPF2520D4R7
12	2	FB6,FB7	BEAD	FILTER CHIP 120 OHM 1.5A 0402	0402	Murata	BLM15EG121SN1D
DIODES							
13	1	D1	LED	Green LED	0603	Lite-On Inc	LTST-C190KGKT
IC'S							
14	1	U1	Module	RS9113 Module with integrated antenna		Redpine	RS9113 Module with integrated antenna
15	1	U3	MAX3232CDBR	RS232 Level Shifter	SSOP-16	Texas	MAX3232CDBR
Miscellaneous							
16	1	J13	Jack	3 Pin Power Jack	DIP		
17	1	P1	DB9	9 Pin Female DB9 Connector	DIP		
Reset Circuit - based on selected option							
18	2	C10,C24	20pF	CAP CER 20PF 25V 5% NP0	0402	Murata	GRM1555C1E200JZ01D
19	1	C14	3.9nF	CAP CER 3900PF 50V 10% X7R	0402	Murata	GRM155R71H392KA01D
20	2	C12,C13	0.1uF	CER CHIP C 0.1U 10% X5R 0402 10V	0402	Murata	GRM155R61A104KA01D

21	1	13	10K	CHIP RES 10K 5% 200PPM 0402 1/10W	0402	Panasonic	ERJ-2GEJ103X
22	2	R10,R12	100K	CHIP RES 100K 5% 200PPM 0402 1/10W	0402	Panasonic	ERJ-2GEJ104X
23	2	R9,R11	1M	CHIP RES 1M 5% 200PPM 0402 1/10W	0402	Panasonic	ERJ-2GEJ105X
24	1	SW1	sw	SWITCH TACTILE SPST-NO 0.02A 15V	SMD	ALPS	SKRAAKE010
25	1	U2	Reset	IC MPU/Reset circuit	SOT23-5	Maxim	MAX6415UK-T
26	1	Y1	Crystal	CRYSTAL 32.768KHZ 9PF SMD	SMD	Epson	MC-146 32.768000kHz 12.5
Do Not Populate							
27	1	R14	0E	CHIP RES 0.0R 5% 200PPM 0402 1/10W	0402	Panasonic	ERJ-2GE0R00X

Table 7: Bill of Material for UART mode

1.3 Recommended PCB Landing Pattern

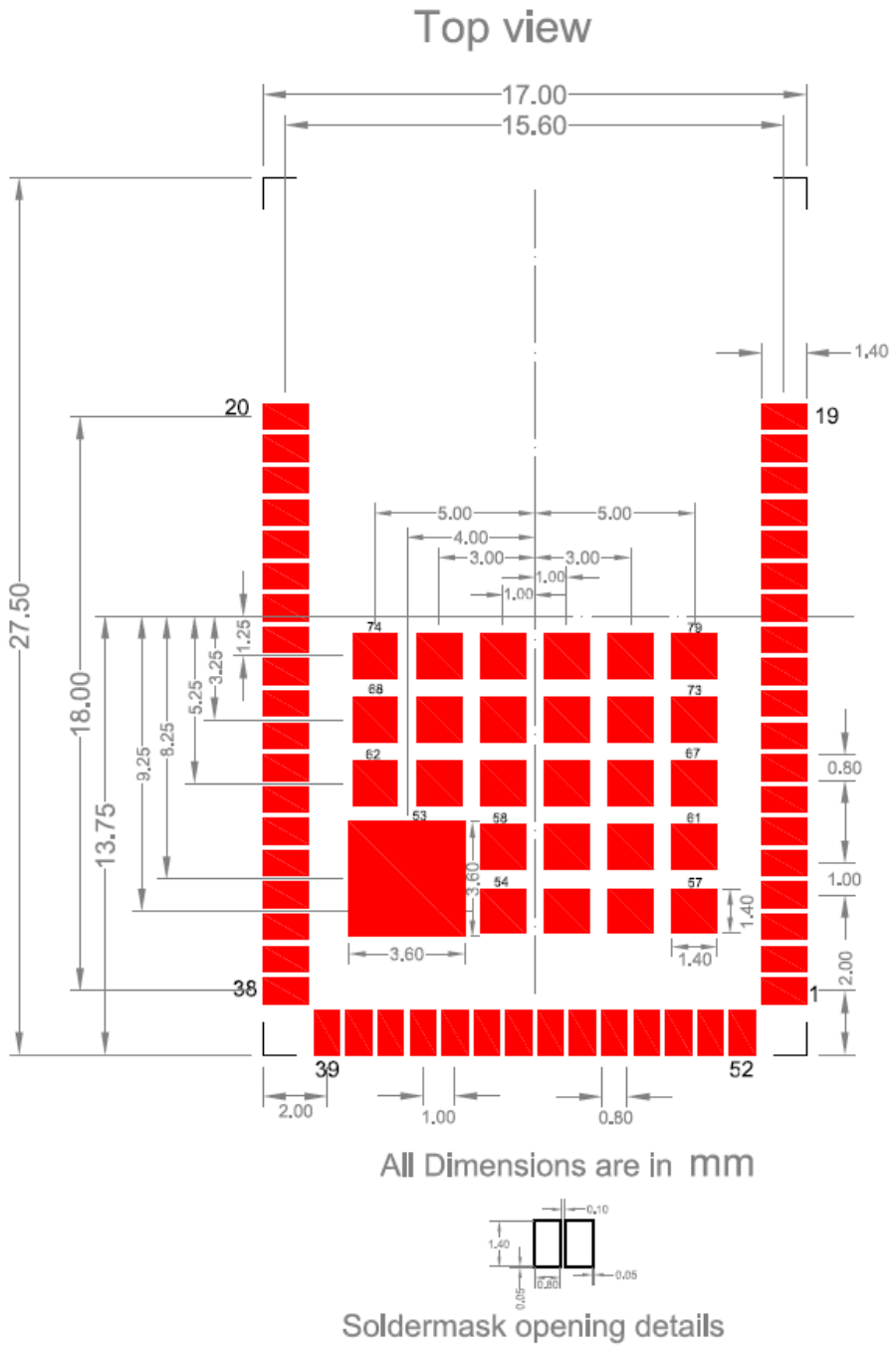

Figure 8: PCB Landing Pattern for RS9113 Module with Integrated Antenna

1.4 Circuit and Layout Guidelines

The following are guidelines for integrating the RS9113 module with integrated antenna.

1. The wireless module has 27 ground pads, with two different sizes as mentioned below. Please note that all the ground pads are aligned just across the center of the module on the bottom side.
    - Please provide one ground pad of size 3.60mm x 3.60mm and 26 ground pads of size 1.4mm x 1.4 mm copper pads on the top side of the application board. Please open the solder mask in this area so that the Cu is exposed
    - Please provide one ground pad of size 3.60mm x 3.60mm or higher copper pad on the bottom side of the application board. Please open the solder mask in this area so that the Cu is exposed.
    - The RF ground pad should have 16 Vias, Each via should have a pad size of 24mil diameter and a 16mil drill.
2. For RESET, one of the following three options should be followed.
    a. Reset may be driven by an R-C circuit. The recommended value of 'R' is 100 KΩ and the recommended value of 'C' is 0.1uF.
    b. Reset may be driven IC based circuit.
    c. The RESET can be Host driven. At the time of Power-on, Please ensure that the reset is held low for 20mSec or more. After this the reset should be driven high.
3. The copper underneath the antenna on the application board should be etched out on all the layers.

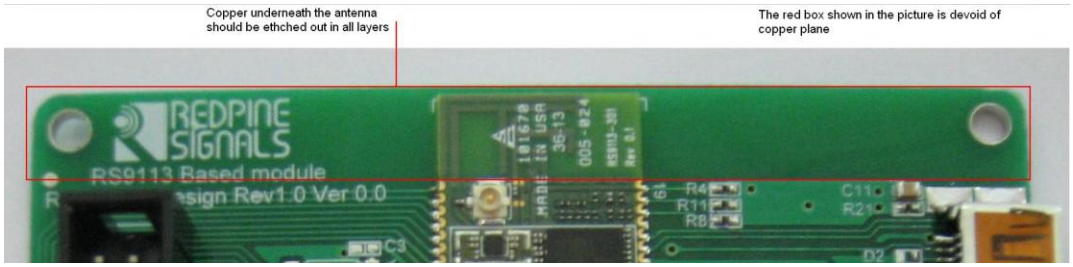

Figure 9: Copper Etching Guidelines

1.5 Sample Layout in SDIO mode

1.5.1 Top Layer

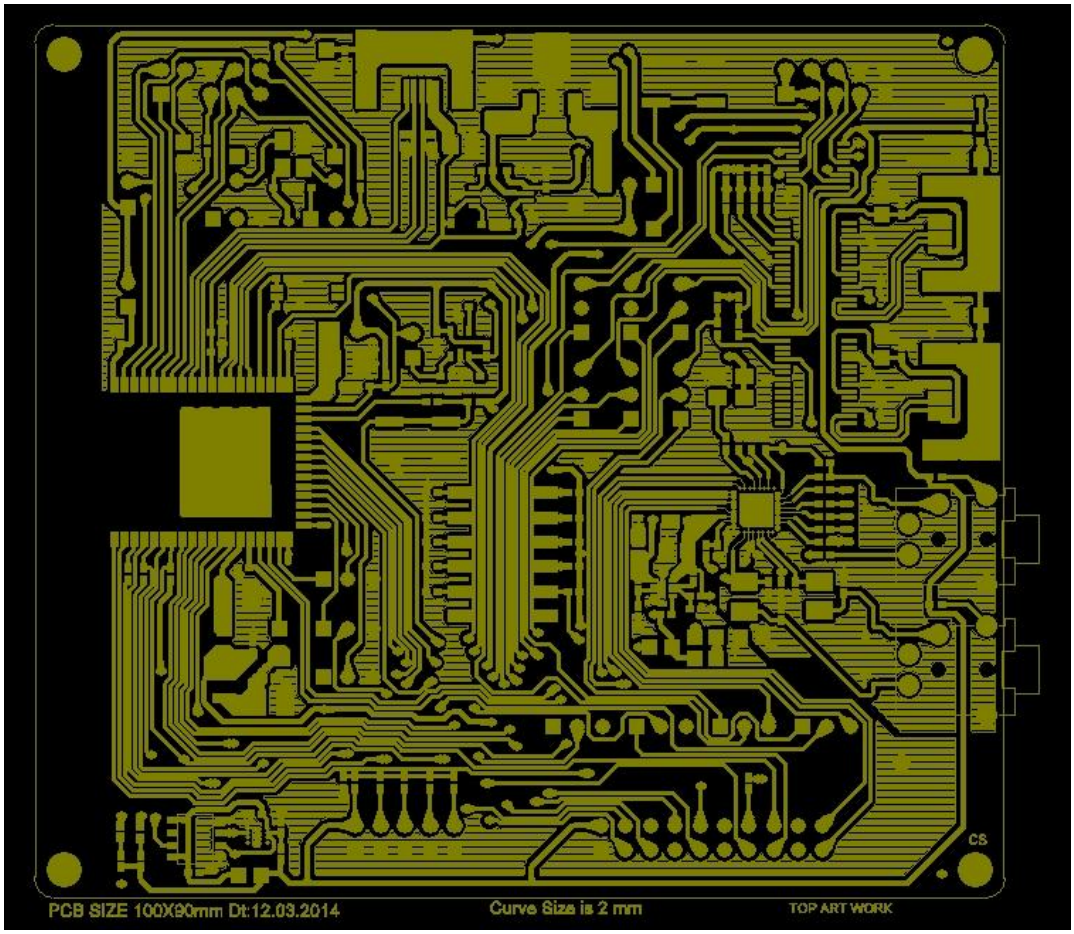

Figure 10: PCB Top Layer Diagram

1.5.2 Bottom Layer

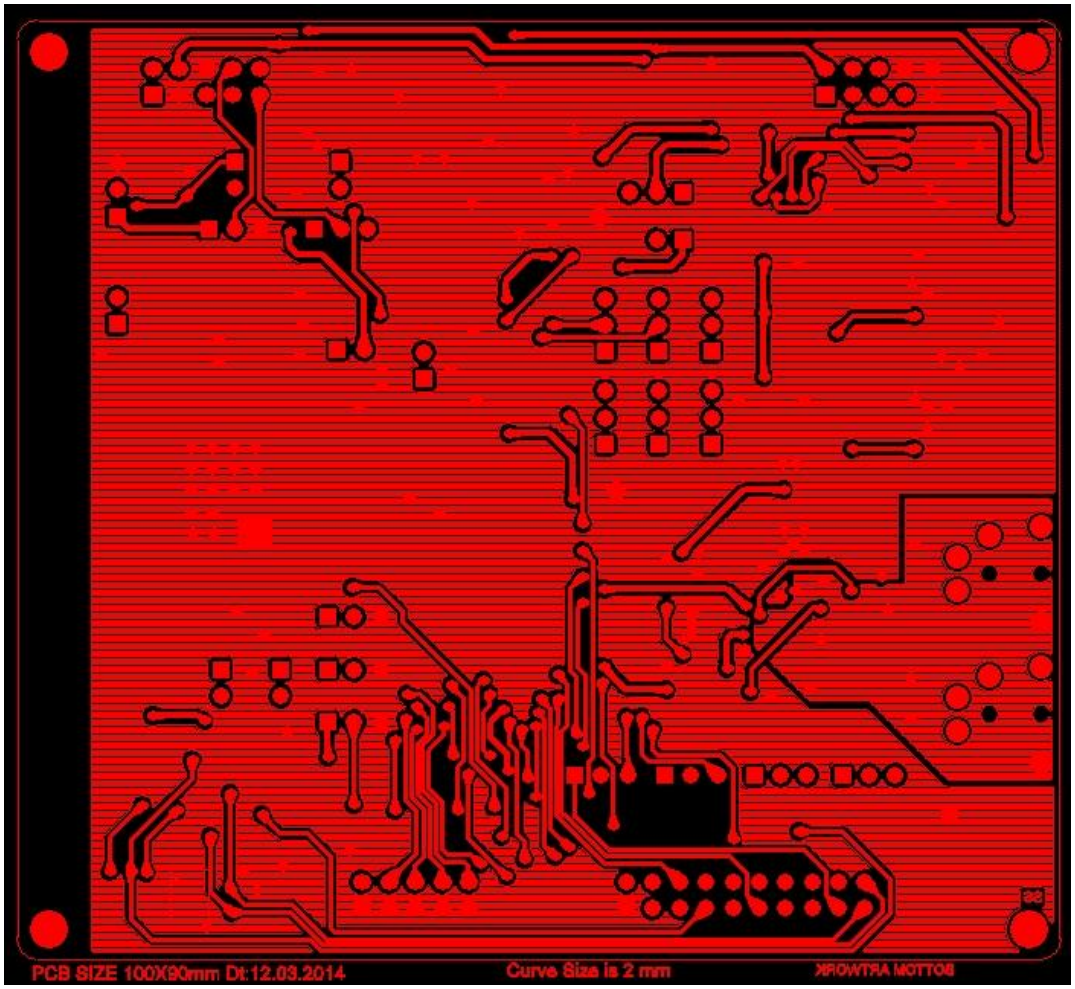

Figure 11: PCB Bottom Layer Diagram

1.5.3 Component Placement

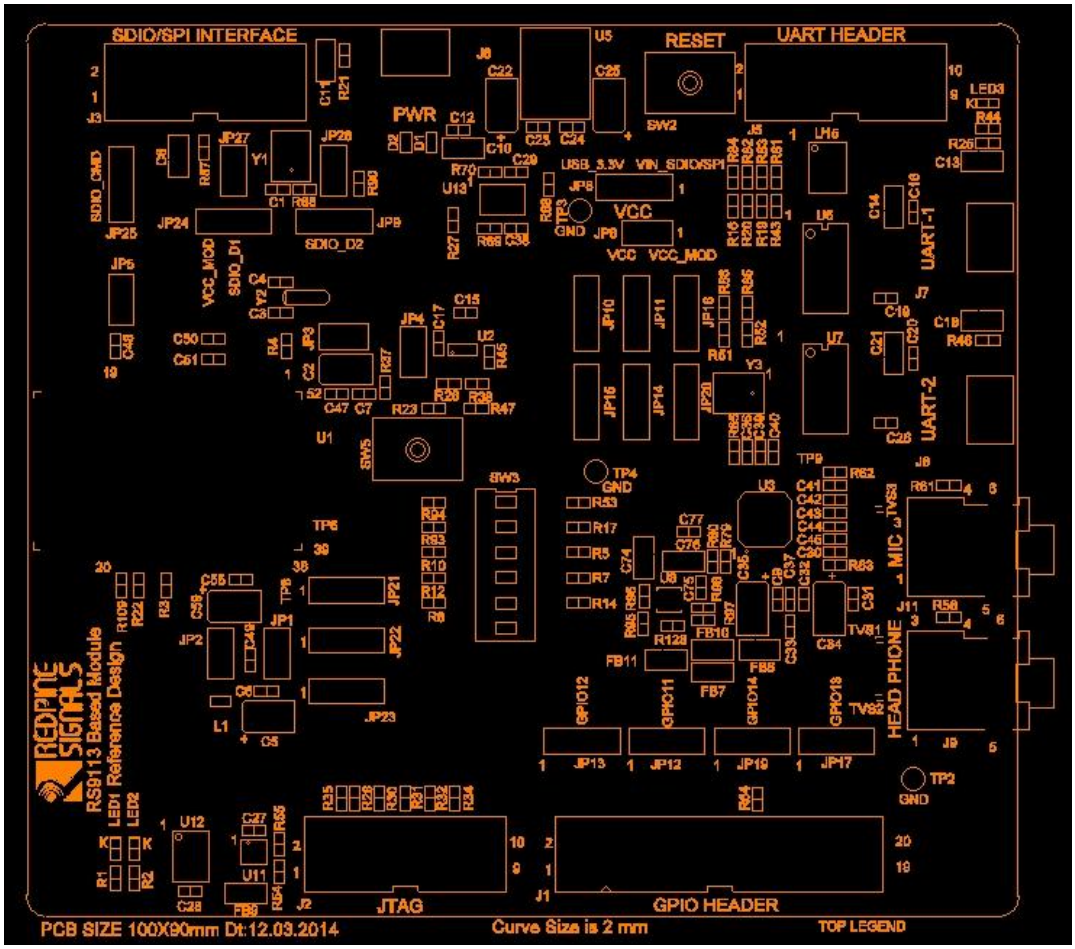

Figure 12 : PCB Component Placement Diagram

1.6 u.FL Connector for External Antenna

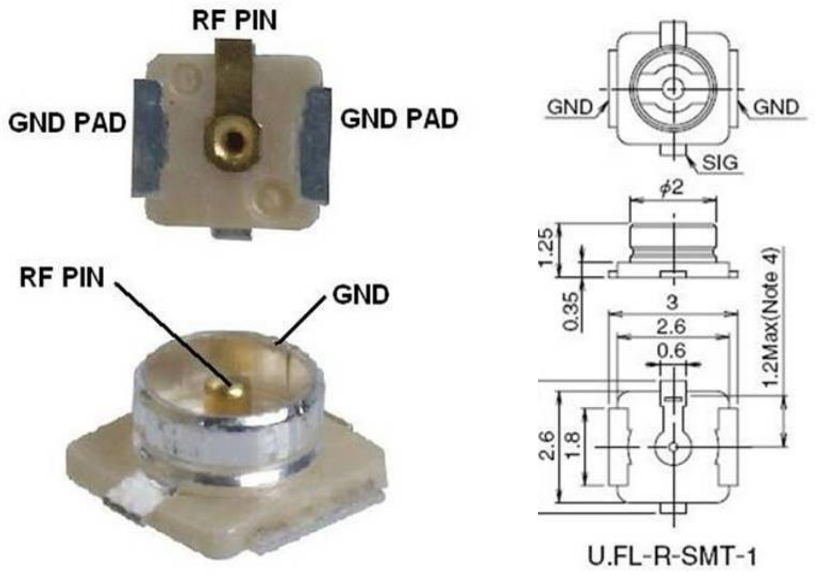

Figure 13 : u.FL Connector on module [Part no. Hirose U.FL-R-SMT (01)]

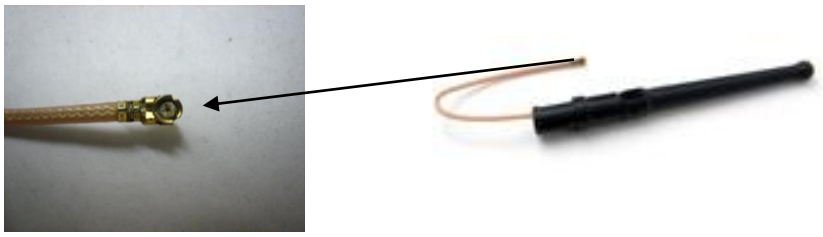

External Antenna

The RS9113 based module with integrated antenna module comes with an integrated on board antenna, and also an u.FL connector, where an external antenna can be connected. A choice between the on board antenna and the external antenna can be made through a software command. The figures show the u.FL connector integrated on the module. The connector on the external antenna should be pushed down to fit into the u.FL connector connected to the module. Some reference part numbers for external antenna are

given below. This is for general guidance only, as the choice of the antenna will depend on the application.

Manufacturer	Part No
Laird Technologies	0600-00040
Digi International	A24-HABUF-P5I
Connectblue	cB-ACC-27
Connectblue	cB-ACC-29

2 RS9113 module without integrated antenna

The following is a reference circuit schematic, BOM, Recommended PCB Landing Pattern, Circuit and Layout Guidelines, Antenna Layout Recommendations and Sample layout of an Evaluation Board using the RS9113 based module without integrated antenna. The schematics are shown for SDIO, SPI, UART and USB host interface options. The layout corresponding to this schematic is also shown in this document as a reference.

2.1 System Block Diagram

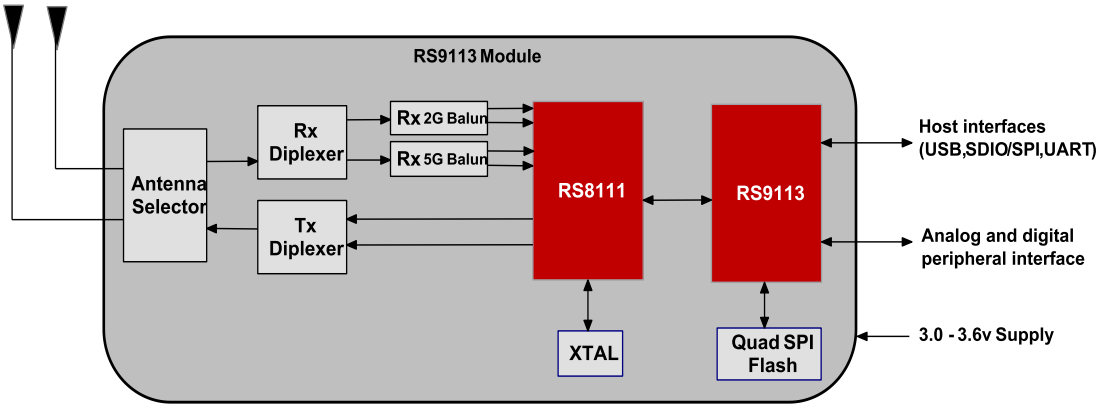

Figure 14: RS9113 Module without Integrated Antenna

2.2 Reference Schematics and BOM

The default values of all the GPIO pins on powering up RS9113 shall be set to HIGH and are configured as outputs. The following sections provide reference schematics for interconnecting the module over SPI, SDIO, USB host interfaces. Given a module without integrated antenna, RF_OUT_2 is the default RF port to connect an antenna as shown in the following schematics. The other RF port RF_OUT_1 should be terminated as shown in the schematics if not used.

The following table describes the host interface mode selection for WiSeConnect and Connect-io-n family by using pull resistors on HOST_SEL_0 and HOST_SEL_1 pins. Internally, both the pins are pulled high.

Note: Host select pin configuration as shown in the table below for UART is applicable for WiSeConnect/Connect-io-n module families. For n-Link module family, UART shall function in conjunction with SPI/SDIO/USB irrespective of Host select pins configuration.

Mode	HOST_SEL_1	HOST_SEL_0
UART	0	0
SPI	1	0
USB	0	1
SDIO	1	1

Table 8: Host Interface Selection

2.2.1 Power Supply

It is recommended to have a tightly regulated power supply which is 3.3V +/- 5% and can handle a continuous current of 500mA. As a general practice it is always suggested to have a 30% buffer on current rating of the power supply.

2.2.2 SDIO mode Interface Schematic (Input supply – 1.8V)

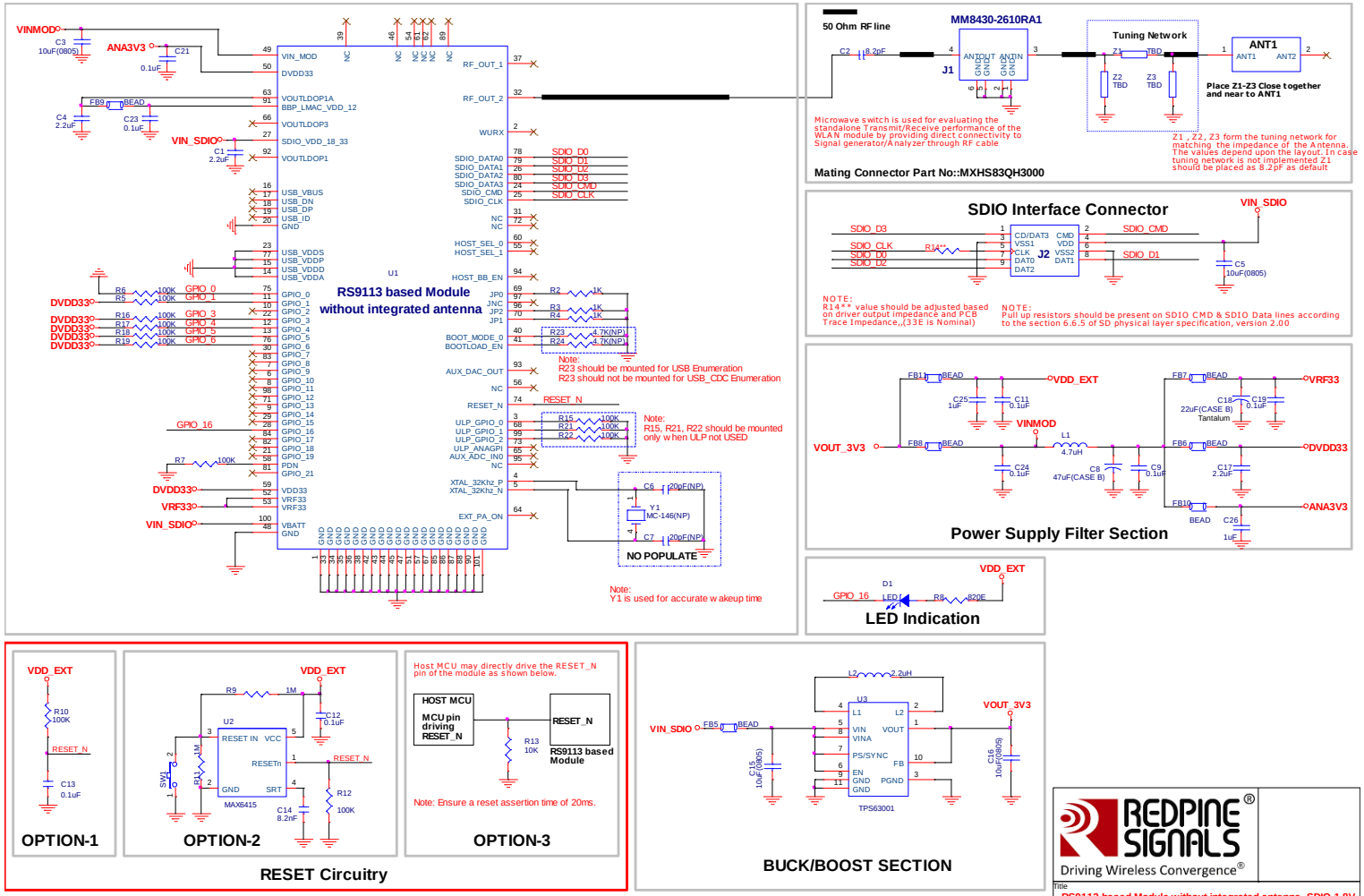

Redpine Signals Confidential

Figure 15: SDIO mode Interface Schematic – 1.8V

NOTE: Pull up resistors should be present on SDIO_CMD & SDIO_Data lines according to the SDIO physical layer specification, version 2.00

2.2.2.1 Bill of Materials for SDIO mode (Input supply – 1.8V)

Item	Qty	Reference	Part Value	Description	Jedec	Mfg	Part No
CAPACITORS							
1	1	C2	8.2pF	CER CHP C 8.2P +-0.25P C0G 0402 25V LF	0402	Murata	GRM1555C1H8R2CZ01D
2	6	C9,C19,C11,C21,C23,C24	0.1uF	CER CHIP C 0.1U 10% X5R 0402 10V	0402	Murata	GRM155R61A104KA01D
3	3	C1,C4,C17	2.2uF	CER CHIP C 2.2U 20% X5R 0402 4V	0402	Murata	GRM155R60G225ME15D
4	4	C3,C5,C15,C16	10uF	CER CHIP C 10U 20% X5R 0805 10V	0805	Murata	GRM21BR61A106KE19L
5	2	C25,C26	1uF	CAP CER 1UF 10V 10% X5R 0402	0402	Murata	GRM155R61A105KE15D
6	1	C18	22uF	CAP TANT 22uF 10V 10%	Case B	AVX	TAJB226K006RNJ
7	1	C8	47uF	CAP TANT 47UF 6.3V 10%	Case B	AVX	TAJB476K006RNJ
RESISTORS							
8	1	R14**	33E	CHIP RES 33R 5% 200PPM 0402 1/10W	0402	Panasonic	ERJ-2GEJ330X
9	1	R8	820E	CHIP RES 820R 5% 200PPM 0402 1/10W	0402	Panasonic	ERJ-2GEJ821X
10	3	R2,R3,R4	1K	RES 1.0K OHM 1/16W 5% 0402 SMD	0402	Yageo	RC0402JR-071KL
11	10	R5,R6,R7,R15,R16,R17,R18,R19,R21,R22	100K	CHIP RES 100K 5% 200PPM 0402 1/10W	0402	Panasonic	ERJ-2GEJ104X
INDUCTORS							
12	1	L1	4.7uH	Power Inductor	SMD	FDK	MIPF2520D4R7
13	1	L2	2.2uH	FIXED IND 2.2UH 1.6A 73 MOHM	SMD	Murata	LQH3NPN2R2NM0L
14	7	FB5,FB6,FB7,FB8,FB9,FB10,FB11	BEAD	FILTER CHIP 120 OHM 1.5A 0402	0402	Murata	BLM15EG121SN1D
DIODES							
15	1	D1	LED	Green LED	0603	Lite-On Inc	LTST-C190KGKT
16	1	U1	B1-03	RS9113-B1-03 Module	14X15	Redpine	RS9113

ANTENNA TUNING NETWORK							
17	3	Z1,Z2,Z3	TBD	Refer to the description in the schematic. Sample part number for Z1 given here	0402	Murata	GRM1555C1H8R2CZ01D
Miscellaneous							
18	1	ANT1	Antenna	2.45GHz &5GHz SMD Antenna	SMD	Fractus	FR05-S1-NO-1-004
19	1	J1	Con	Microwave Coaxial Connector with switch	SMD	Murata	MM8430-2610RA1
20	1	J2	Con	SDIO Interface Card Connector	SMD		
Optional							
21	2	C6,C7	20pF	CAP CER 20PF 25V 5% NP0	0402	Murata	GRM1555C1E200JZ01D
22	1	C14	8.2nF		0402	Murata	
23	2	C12,C13	0.1uF	CER CHIP C 0.1U 10% X5R 0402 10V	0402	Murata	GRM155R61A104KA01D
24	2	R23,R24	4.7K	CHIP RES 4K7 5% 200PPM 0402 1/10W	0402	Panasonic	ERJ-2GEJ472X
25	1	R13	10K	CHIP RES 10K 5% 200PPM 0402 1/10W	0402	Panasonic	ERJ-2GEJ103X
26	2	R10,R12	100K	CHIP RES 100K 5% 200PPM 0402 1/10W	0402	Panasonic	ERJ-2GEJ104X
27	2	R9,R11	1M	CHIP RES 1M 5% 200PPM 0402 1/10W	0402	Panasonic	ERJ-2GEJ105X
28	1	SW1	sw	SWITCH TACTILE SPST-NO 0.02A 15V	SMD	ALPS	SKRAAKE010
29	1	U2	Reset	IC MPU/Reset circuit	SOT23-5	Maxim	MAX6415UK-T
30	1	Y1	Crystal	CRYSTAL 32.768KHZ 9PF SMD	SMD	Epson	MC-146 32.768000kHz 12.5

Table 9: Bill of Material for SDIO mode (Input supply – 1.8V)

2.2.3 SDIO mode Interface Schematic (Input supply – 3.3V)

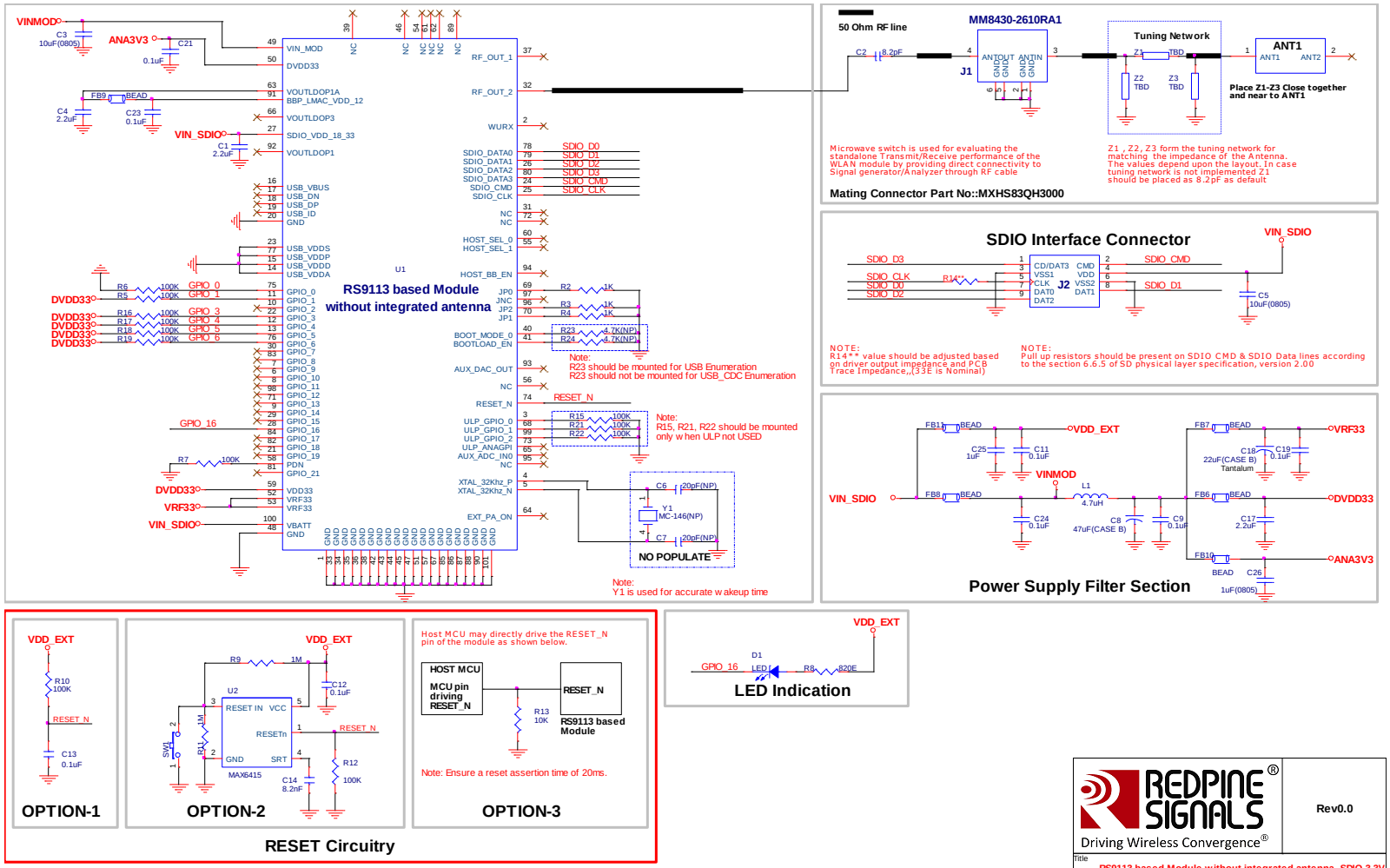

Redpine Signals Confidential

Figure 16: SDIO mode Interface Schematic – 3.3V

NOTE: Pull up resistors should be present on SDIO_CMD & SDIO_Data lines according to the SDIO physical layer specification, version 2.00

2.2.3.1 Bill of Materials for SDIO mode (Input supply – 3.3V)

Item	Qty	Reference	Part Value	Description	Jedec	Mfg	Part No
CAPACITORS							
1	1	C2	8.2pF	CER CHP C 8.2P +-0.25P C0G 0402 25V LF	0402	Murata	GRM1555C1H8R2CZ01D
2	6	C9,C19,C11,C21,C23,C24	0.1uF	CER CHIP C 0.1U 10% X5R 0402 10V	0402	Murata	GRM155R61A104KA01D
3	3	C1,C4,C17	2.2uF	CER CHIP C 2.2U 20% X5R 0402 4V	0402	Murata	GRM155R60G225ME15D
4	2	C3,C5	10uF	CER CHIP C 10U 20% X5R 0805 10V	0805	Murata	GRM21BR61A106KE19L
5	2	C25,C26	1uF	CAP CER 1UF 10V 10% X5R 0402	0402	Murata	GRM155R61A105KE15D
6	1	C18	22uF	CAP TANT 22uF 10V 10%	Case B	AVX	TAJB226K006RNJ
7	1	C8	47uF	CAP TANT 47UF 6.3V 10%	Case B	AVX	TAJB476K006RNJ
RESISTORS							
8	1	R14**	33E	CHIP RES 33R 5% 200PPM 0402 1/10W	0402	Panasonic	ERJ-2GEJ330X
9	1	R8	820E	CHIP RES 820R 5% 200PPM 0402 1/10W	0402	Panasonic	ERJ-2GEJ821X
10	3	R2,R3,R4	1K	RES 1.0K OHM 1/16W 5% 0402 SMD	0402	Yageo	RC0402JR-071KL
11	10	R5,R6,R7,R15,R16,R17,R18,R19,R21,R22	100K	CHIP RES 100K 5% 200PPM 0402 1/10W	0402	Panasonic	ERJ-2GEJ104X
INDUCTORS							
12	1	L1	4.7uH	Power Inductor	SMD	FDK	MIPF2520D4R7
13	6	FB6,FB7,FB8,FB9,FB10,FB11	BEAD	FILTER CHIP 120 OHM 1.5A 0402	0402	Murata	BLM15EG121SN1D
DIODES							
14	1	D1	LED	Green LED	0603	Lite-On Inc	LTST-C190KGKT
15	1	U1	B1-03	RS9113-B1-03 Module	14X15	Redpine	RS9113
ANTENNA TUNING NETWORK							
16	3	Z1,Z2,Z3	TBD	Refer to the description in the schematic. Sample part number for Z1 given here	0402	Murata	GRM1555C1H8R2CZ01D
Miscellaneous							
17	1	ANT1	Antenna	2.45GHz &5GHz SMD Antenna	SMD	Fractus	FR05-S1-NO-1-004

18	1	J1	Con	Microwave Coaxial Connector with switch	SMD	Murata	MM8430-2610RA1
19	1	J2	Con	SDIO Interface Card Edge Connector	SMD		
Optional							
20	2	C6,C7	20pF	CAP CER 20PF 25V 5% NP0	0402	Murata	GRM1555C1E200JZ01D
21	1	C14	8.2nF		0402	Murata	
22	2	C12,C13	0.1uF	CER CHIP C 0.1U 10% X5R 0402 10V	0402	Murata	GRM155R61A104KA01D
23	2	R23,R24	4.7K	CHIP RES 4K7 5% 200PPM 0402 1/10W	0402	Panasonic	ERJ-2GEJ472X
24	1	R13	10K	CHIP RES 10K 5% 200PPM 0402 1/10W	0402	Panasonic	ERJ-2GEJ103X
25	2	R10,R12	100K	CHIP RES 100K 5% 200PPM 0402 1/10W	0402	Panasonic	ERJ-2GEJ104X
26	2	R9,R11	1M	CHIP RES 1M 5% 200PPM 0402 1/10W	0402	Panasonic	ERJ-2GEJ105X
27	1	SW1	sw	SWITCH TACTILE SPST-NO 0.02A 15V	SMD	ALPS	SKRAAKE010
28	1	U2	Reset	IC MPU/Reset circuit	SOT23-5	Maxim	MAX6415UK-T
29	1	Y1	Crystal	CRYSTAL 32.768KHZ 9PF SMD	SMD	Epson	MC-146 32.768000kHz 12.5

Table 10: Bill of Material for SDIO mode (Input supply – 3.3 V)

2.2.4 SPI mode Interface Schematic

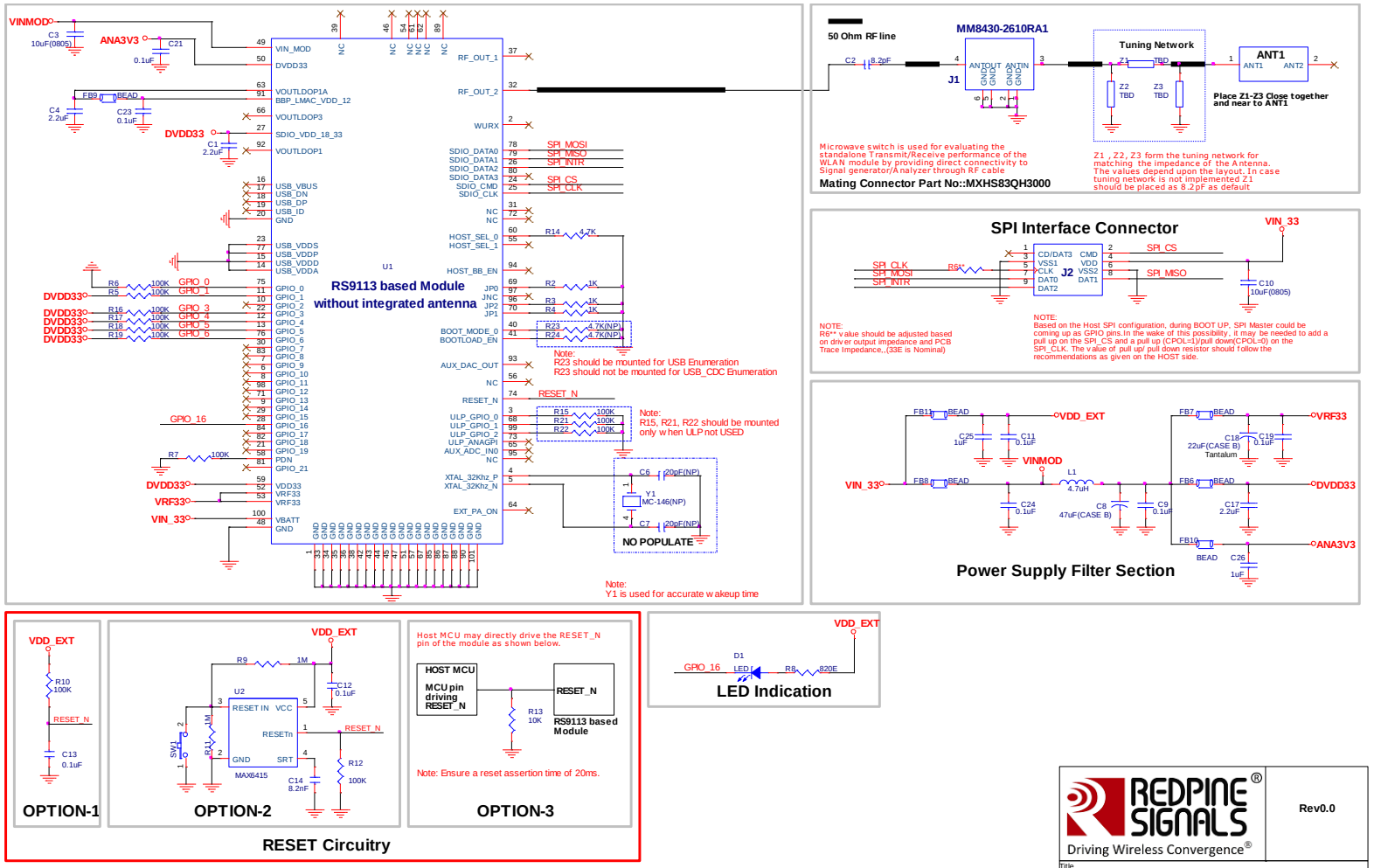

Figure 17: SPI mode Interface Schematic

NOTE: Based on the Host SPI configuration, during BOOT UP, SPI Master could be coming up as GPIO pins. In the wake of this possibility, it may be needed to add a pull up on the SPI_CS and a pull up (CPOL=1)/pull down (CPOL=0) on the SPI_CLK. The value of pull up/ pull down resistor should follow the recommendations as given on the HOST side.

2.2.4.1 Bill of Materials for SPI mode

Item	Qty	Reference	Part Value	Description	Jedec	Mfg	Part No
CAPACITORS							
1	1	C2	8.2pF	CER CHP C 8.2P +-0.25P C0G 0402 25V LF	0402	Murata	GRM1555C1H8R2CZ01D
2	6	C9,C19,C11,C21,C23,C24	0.1uF	CER CHIP C 0.1U 10% X5R 0402 10V	0402	Murata	GRM155R61A104KA01D
3	3	C1,C4,C17	2.2uF	CER CHIP C 2.2U 20% X5R 0402 4V	0402	Murata	GRM155R60G225ME15D
4	2	C3,C10	10uF	CER CHIP C 10U 20% X5R 0805 10V	0805	Murata	GRM21BR61A106KE19L
5	2	C25,C26	1uF	CAP CER 1UF 10V 10% X5R 0402	0402	Murata	GRM155R61A105KE15D
6	1	C18	22uF	CAP TANT 22uF 10V 10%	Case B	AVX	TAJB226K006RNJ
7	1	C8	47uF	CAP TANT 47UF 6.3V 10%	Case B	AVX	TAJB476K006RNJ
RESISTORS							
8	1	R6	33E	CHIP RES 33R 5% 200PPM 0402 1/10W	0402	Panasonic	ERJ-2GEJ330X
9	1	R1	51E	RES 51.0 OHM 1/10W 1% (0402)	0402	Panasonic	ERJ-2GE J510X
10	1	R8	820E	CHIP RES 820R 5% 200PPM 0402 1/10W	0402	Panasonic	ERJ-2GEJ821X
11	1	R14	4.7K	CHIP RES 4K7 5% 200PPM 0402 1/10W	0402	Panasonic	ERJ-2GEJ472X
12	3	R2,R3,R4	1K	RES 1.0K OHM 1/16W 5% 0402 SMD	0402	Yageo	RC0402JR-071KL
13	10	R5,R6,R7,R15,R16,R17,R18,R19,R21,R22	100K	CHIP RES 100K 5% 200PPM 0402 1/10W	0402	Panasonic	ERJ-2GEJ104X
INDUCTORS							
14	1	L1	4.7uH	Power Inductor	SMD	FDK	MIPF2520D4R7
15	6	FB6,FB7,FB8,FB9,FB10,FB11	BEAD	FILTER CHIP 120 OHM 1.5A 0402	0402	Murata	BLM15EG121SN1D
DIODES							
16	1	D1	LED	Green LED	0603	Lite-On Inc	LTST-C190KGKT
IC'S							
17	1	U1	B1-03	RS9113-B1-03 Module	14X15	Redpine	RS9113
ANTENNA TUNING NETWORK							
18	3	Z1,Z2,Z3	TBD	Refer to the description in the schematic. Sample part number for Z1 given here	0402	Murata	GRM1555C1H8R2CZ01D

Miscellaneous							
19	1	ANT1	Antenna	2.45GHz &5GHz SMD Antenna	SMD	Fractus	FR05-S1-NO-1-004
20	1	J1	Con	Microwave Coaxial Connector with switch	SMD	Murata	MM8430-2610RA1
21	1	J2	Header	5X2 Berg Header	DIP	Berg	
Optional							
22	2	C6,C7	20pF	CAP CER 20PF 25V 5% NP0	0402	Murata	GRM1555C1E200JZ01D
23	1	C14	8.2nF		0402	Murata	
24	2	C12,C13	0.1uF	CER CHIP C 0.1U 10% X5R 0402 10V	0402	Murata	GRM155R61A104KA01D
25	1	R13	10K	CHIP RES 10K 5% 200PPM 0402 1/10W	0402	Panasonic	ERJ-2GEJ103X
26	2	R10,R12	100K	CHIP RES 100K 5% 200PPM 0402 1/10W	0402	Panasonic	ERJ-2GEJ104X
27	2	R23,R24	4.7K	CHIP RES 4K7 5% 200PPM 0402 1/10W	0402	Panasonic	ERJ-2GEJ472X
28	2	R9,R11	1M	CHIP RES 1M 5% 200PPM 0402 1/10W	0402	Panasonic	ERJ-2GEJ105X
29	1	SW1	sw1	SWITCH TACTILE SPST-NO 0.02A 15V	SMD	ALPS	SKRAAKE010
30	1	U2	Reset	IC MPU/Reset circuit	SOT23-5	Maxim	MAX6415UK-T
31	1	Y1	Crystal	CRYSTAL 32.768KHZ 9PF SMD	SMD	Epson	MC-146 32.768000kHz 12.5

Table 11: Bill of Material for SPI mode

2.2.5 USB mode Interface Schematic

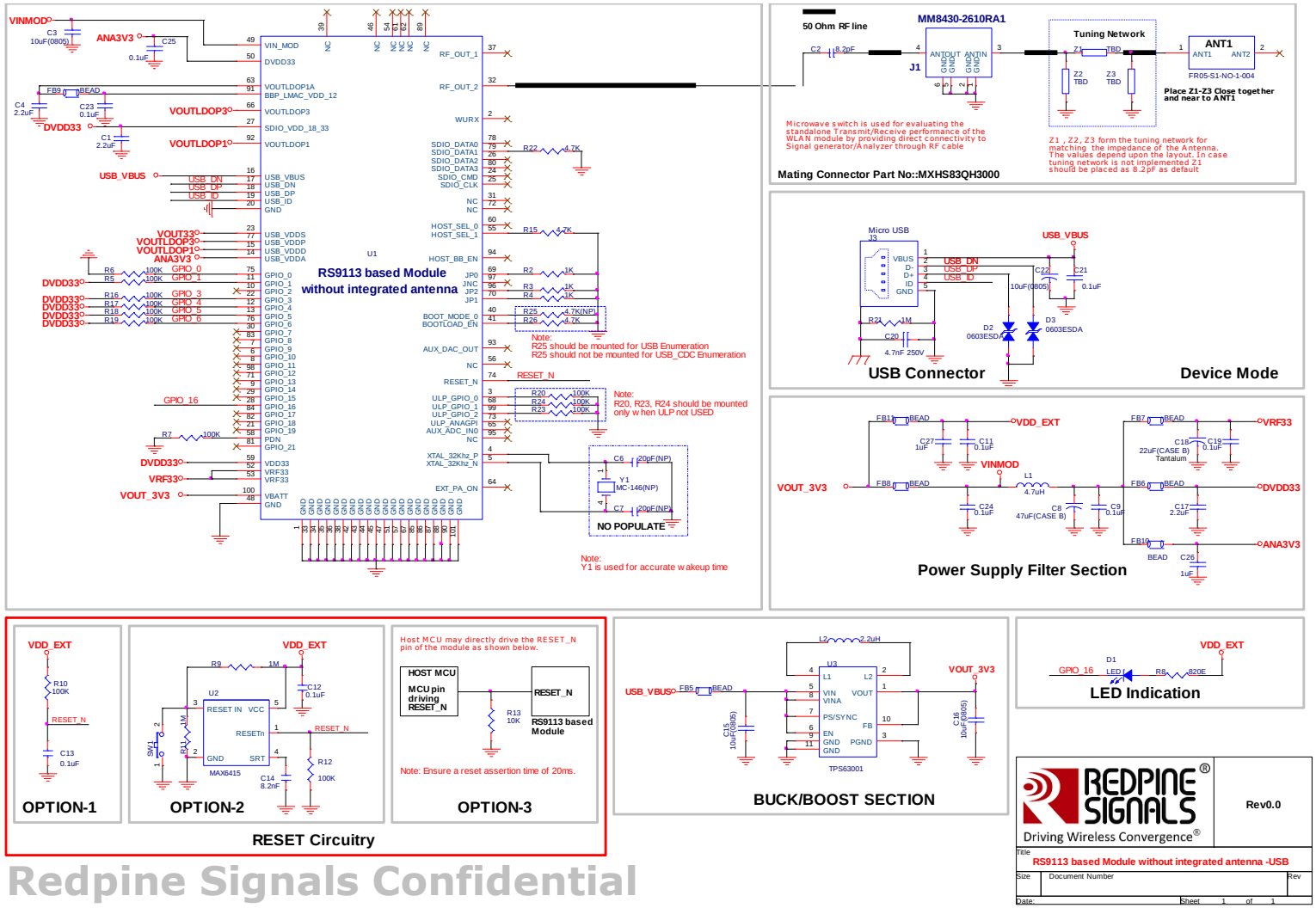

Figure 18: USB mode Interface Schematic

2.2.5.1 Bill of Materials for USB mode

Item	Qty	Reference	Part Value	Description	Jedec	Mfg	Part No
CAPACITORS							
1	1	C2	8.2pF	CER CHP C 8.2P +-0.25P C0G 0402 25V LF	0402	Murata	GRM1555C1H8R2CZ01D
2	7	C9,C11,C19,C21,C23,C24,C25	0.1uF	CER CHIP C 0.1U 10% X5R 0402 10V	0402	Murata	GRM155R61A104KA01D
3	3	C1,C4,C17	2.2uF	CER CHIP C 2.2U 20% X5R 0402 4V	0402	Murata	GRM155R60G225ME15D
4	1	C20	4.7nF 250V	CAP CER 4700PF 100V 10% X7R 0805	0805	Murata	GRM219R72A472KA01D
5	2	C27,C26	1uF	CAP CER 1UF 10V 10% X5R 0402	0402	Murata	GRM155R61A105KE15D
6	4	C3,C15,C16,C22	10uF	CER CHIP C 10U 20% X5R 0805 10V	0805	Murata	GRM21BR61A106KE19L
7	1	C18	22uF	CAP TANT 22uF 10V 10%	Case B	AVX	TAJB226K006RNJ
8	1	C8	47uF	CAP TANT 47UF 6.3V 10%	Case B	AVX	TAJB476K006RNJ
RESISTORS							
9	1	R8	820E	CHIP RES 820R 5% 200PPM 0402 1/10W	0402	Panasonic	ERJ-2GEJ821X
10	3	R2,R3,R4	1K	RES 1.0K OHM 1/16W 5% 0402 SMD	0402	Yageo	RC0402JR-071KL
11	4	R15,R22,R25,R26	4.7K	CHIP RES 4K7 5% 200PPM 0402 1/10W	0402	Panasonic	ERJ-2GEJ472X
12	10	R5,R6,R7,R16,R17,R18,R19,R20,R23,R24	100K	CHIP RES 100K 5% 200PPM 0402 1/10W	0402	Panasonic	ERJ-2GEJ104X
13	1	R21	1M	CHIP RES 1M 5% 200PPM 0402 1/10W	0402	Panasonic	ERJ-2GEJ105X
INDUCTORS							
14	1	L1	4.7uH	Power Inductor	SMD	FDK	MIPF2520D4R7
15	1	L2	2.2uH	Power Inductor	1212	Murata	LQH3NPN2R2NG0L
16	7	FB5,FB6,FB7,FB8,FB9,FB10,FB11	BEAD	FILTER CHIP 120 OHM 1.5A 0402	0402	Murata	BLM15EG121SN1D
DIODES							
17	1	D1	LED	Green LED	0603	Lite-On Inc	LTST-C190KGKT
18	2	D2,D3	0603ESDA	ESD Suppressor	0603	CooperBussmann	0603ESDA-MLP
IC'S							
19	1	U1	B1-03	RS9113-B1-03 Module	14X15	Redpine	RS9113
20	1	U3	TPS63001	Buck-Boost Regulator	QFN-10	Texas	TPS63001DRC

ANTENNA TUNING NETWORK							
21	3	Z1,Z2,Z3	TBD	Refer to the description in the schematic. Sample part number for Z1 given here	0402	Murata	GRM1555C1H8R2CZ01D
Miscellaneous							
22	1	ANT1	Antenna	2.45GHz &5GHz SMD Antenna	SMD	Fractus	FR05-S1-NO-1-004
23	1	J1	Con	Microwave Coaxial Connector with switch	SMD	Murata	MM8430-2610RA1
24	1	J3	USB	Micro USB	SMD	Molex	54819-0572
Optional							
25	2	C6,C7	20pF	CAP CER 20PF 25V 5% NP0	0402	Murata	GRM1555C1E200JZ01D
26	1	C14	8.2nF		0402	Murata	
27	2	C12,C13	0.1uF	CER CHIP C 0.1U 10% X5R 0402 10V	0402	Murata	GRM155R61A104KA01D
28	1	R13	10K	CHIP RES 10K 5% 200PPM 0402 1/10W	0402	Panasonic	ERJ-2GEJ103X
29	2	R10,R12	100K	CHIP RES 100K 5% 200PPM 0402 1/10W	0402	Panasonic	ERJ-2GEJ104X
30	2	R9,R11	1M	CHIP RES 1M 5% 200PPM 0402 1/10W	0402	Panasonic	ERJ-2GEJ105X
31	1	SW1	sw	SWITCH TACTILE SPST-NO 0.02A 15V	SMD	ALPS	SKRAAKE010
32	1	U2	Reset	IC MPU/Reset circuit	SOT23-5	Maxim	MAX6415UK-T
33	1	Y1	Crystal	CRYSTAL 32.768KHZ 9PF SMD	SMD	Epson	MC-146 32.768000kHz 12.5

Table 12: Bill of Material for USB mode

2.2.6 USB CDC mode Interface Schematic

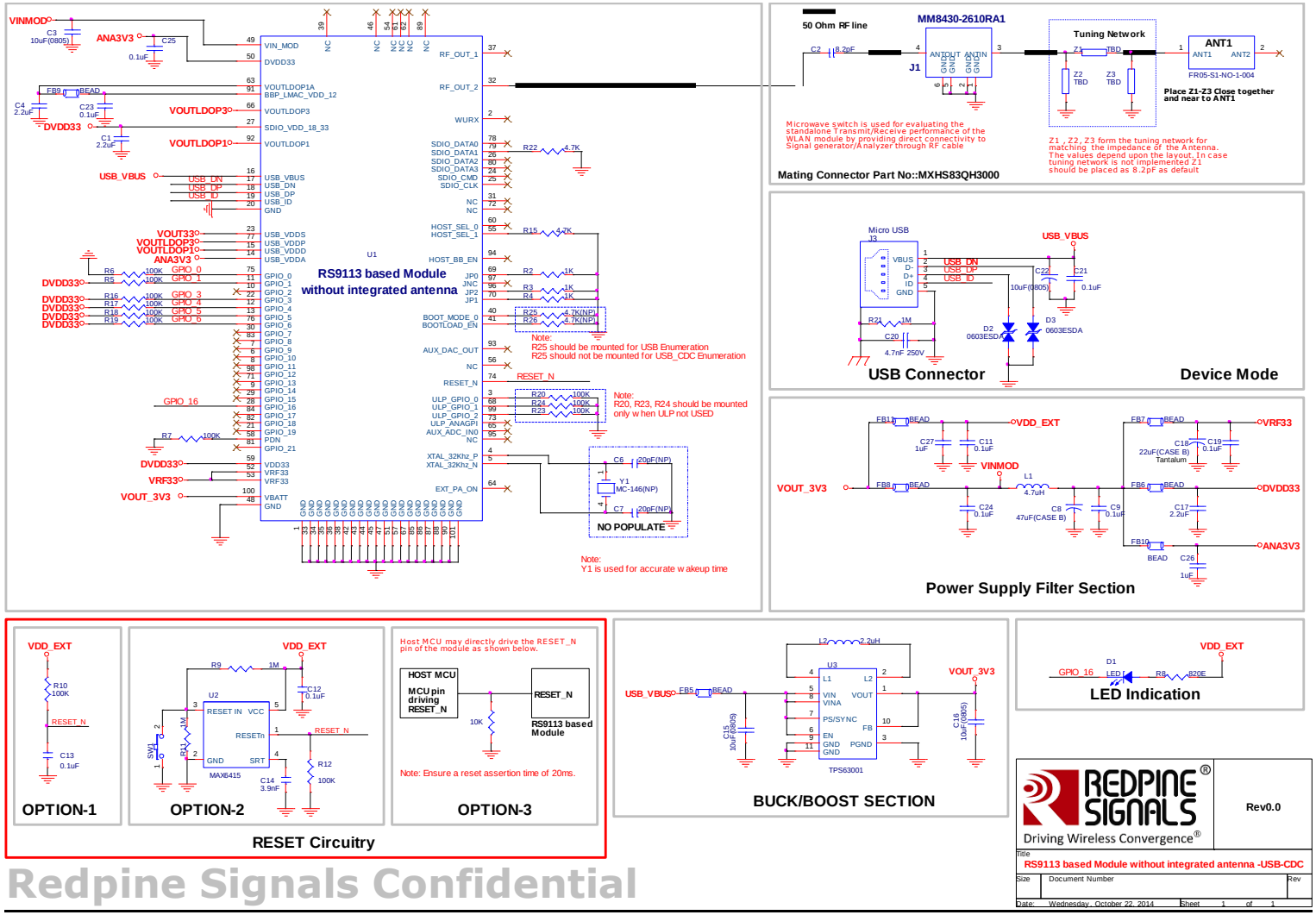

Figure 19 USB CDC Mode Interface Schematics

2.2.6.1 Bill of Materials for USB CDC mode

Item	Qty	Reference	Part Value	Description	Jedec	Mfg	Part No
CAPACITORS							
1	1	C2	8.2pF	CER CHP C 8.2P +-0.25P C0G 0402 25V LF	0402	Murata	GRM1555C1H8R2CZ01D
2	7	C9,C11,C19,C21,C23,C24, C25	0.1uF	CER CHIP C 0.1U 10% X5R 0402 10V	0402	Murata	GRM155R61A104KA01D
3	3	C1,C4,C17	2.2uF	CER CHIP C 2.2U 20% X5R 0402 4V	0402	Murata	GRM155R60G225ME15D
4	1	C20	4.7nF 250V	CAP CER 4700PF 100V 10% X7R 0805	0805	Murata	GRM219R72A472KA01D
5	2	C27,C26	1uF	CAP CER 1UF 10V 10% X5R 0402	0402	Murata	GRM155R61A105KE15D
6	4	C3,C15,C16,C22	10uF	CER CHIP C 10U 20% X5R 0805 10V	0805	Murata	GRM21BR61A106KE19L
7	1	C18	22uF	CAP TANT 22uF 10V 10%	Case B	AVX	TAJB226K006RNJ
8	1	C8	47uF	CAP TANT 47UF 6.3V 10%	Case B	AVX	TAJB476K006RNJ
RESISTORS							
9	1	R8	820E	CHIP RES 820R 5% 200PPM 0402 1/10W	0402	Panasonic	ERJ-2GEJ821X
10	3	R2,R3,R4	1K	RES 1.0K OHM 1/16W 5% 0402 SMD	0402	Yageo	RC0402JR-071KL
11	3	R15,R22,R26	4.7K	CHIP RES 4K7 5% 200PPM 0402 1/10W	0402	Panasonic	ERJ-2GEJ472X
12	10	R5,R6,R7,R16,R17,R18,R19,R20,R23,R24	100K	CHIP RES 100K 5% 200PPM 0402 1/10W	0402	Panasonic	ERJ-2GEJ104X
13	1	R21	1M	CHIP RES 1M 5% 200PPM 0402 1/10W	0402	Panasonic	ERJ-2GEJ105X
INDUCTORS							
14	1	L1	4.7uH	Power Inductor	SMD	FDK	MIPF2520D4R7
15	1	L2	2.2uH	Power Inductor	1212	Murata	LQH3NPN2R2NG0L
16	7	FB5,FB6,FB7,FB8,FB9,FB10,FB11	BEAD	FILTER CHIP 120 OHM 1.5A 0402	0402	Murata	BLM15EG121SN1D
DIODES							
17	1	D1	LED	Green LED	0603	Lite-On Inc	LTST-C190KGKT
18	2	D2,D3	0603ESDA	ESD Suppressor	0603	CooperBussmann	0603ESDA-MLP
IC'S							
19	1	U1	B1-03	RS9113-B1-03 Module	14X15	Redpine	RS9113
20	1	U3	TPS63001	Buck-Boost Regulator	QFN-10	Texas	TPS63001DRC
ANTENNA TUNING NETWORK							
21	3	Z1,Z2,Z3	TBD	Refer to the description in the schematic. Sample part number for Z1 given here	0402	Murata	GRM1555C1H8R2CZ01D

Miscellaneous							
22	1	ANT1	Antenna	2.45GHz &5GHz SMD Antenna	SMD	Fractus	FR05-S1-NO-1-004
23	1	J1	Con	Microwave Coaxial Connector with switch	SMD	Murata	MM8430-2610RA1
24	1	J3	USB	Micro USB	SMD	Molex	54819-0572
Optional							
25	2	C6,C7	20pF	CAP CER 20PF 25V 5% NP0	0402	Murata	GRM1555C1E200JZ01D
26	1	C14	8.2nF		0402	Murata	
27	2	C12,C13	0.1uF	CER CHIP C 0.1U 10% X5R 0402 10V	0402	Murata	GRM155R61A104KA01D
28	1	R25	4.7K	CHIP RES 4K7 5% 200PPM 0402 1/10W	0402	Panasonic	ERJ-2GEJ472X
29	1	R13	10K	CHIP RES 10K 5% 200PPM 0402 1/10W	0402	Panasonic	ERJ-2GEJ103X
30	2	R10,R12	100K	CHIP RES 100K 5% 200PPM 0402 1/10W	0402	Panasonic	ERJ-2GEJ104X
31	2	R9,R11	1M	CHIP RES 1M 5% 200PPM 0402 1/10W	0402	Panasonic	ERJ-2GEJ105X
32	1	SW1	sw	SWITCH TACTILE SPST-NO 0.02A 15V	SMD	ALPS	SKRAAKE010
33	1	U2	Reset	IC MPU/Reset circuit	SOT23-5	Maxim	MAX6415UK-T
34	1	Y1	Crystal	CRYSTAL 32.768KHZ 9PF SMD	SMD	Epson	MC-146 32.768000kHz 12.5

Table 13 Bill of Material for USB CDC Mode

2.2.7 UART mode Interface Schematic

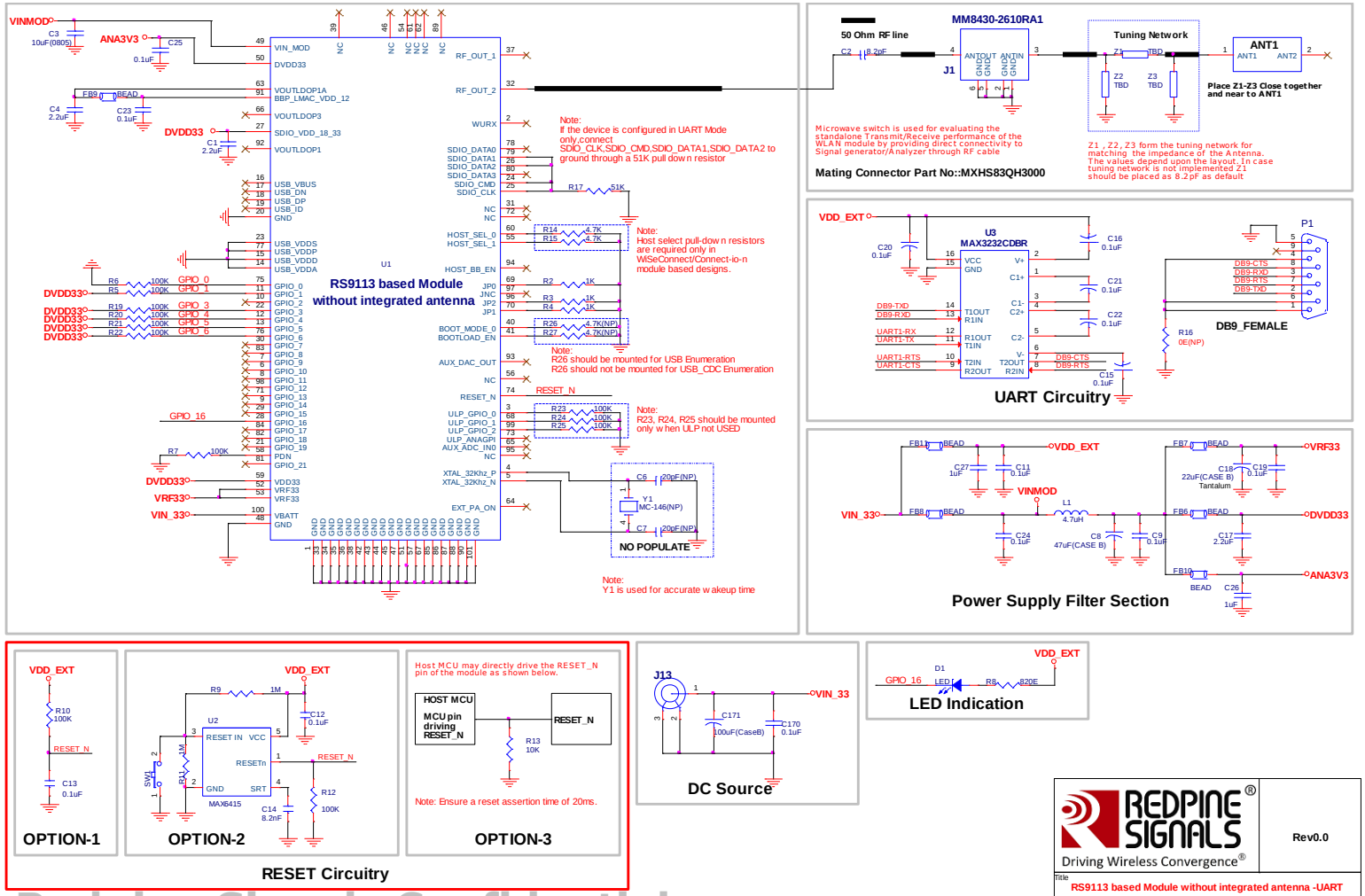

Redpine Signals Confidential

Figure 20: UART mode Interface Schematic

2.2.7.1 Bill of Materials in UART Mode

Item	Qty	Reference	Part Value	Description	Jedec	Mfg	Part No
CAPACITORS							
1	1	C2	8.2pF	CER CHP C 8.2P +-0.25P C0G 0402 25V LF	0402	Murata	GRM1555C1H8R2CZ01D
2	12	C9,C11,C15,C16,C19,C20,C21,C22,C23,C24,C25,C170	0.1uF	CER CHIP C 0.1U 10% X5R 0402 10V	0402	Murata	GRM155R61A104KA01D
3	3	C1,C4,C17	2.2uF	CER CHIP C 2.2U 20% X5R 0402 4V	0402	Murata	GRM155R60G225ME15D
4	2	C26,C27	1uF	CAP CER 1UF 10V 10% X5R 0402	0402	Murata	GRM155R61A105KE15D
5	1	C3	10uF	CER CHIP C 10U 20% X5R 0805 10V	0805	Murata	GRM21BR61A106KE19L
6	1	C18	22uF	CAP TANT 22uF 10V 10%	Case B	AVX	TAJB226K006RNJ
7	1	C8	47uF	CAP TANT 47UF 6.3V 10%	Case B	AVX	TAJB476K006RNJ
8	1	C171	100uF	CAP TANT 100UF 6.3V 10%	Case B	AVX	TAJB107K006RNJ
RESISTORS							
9	1	R8	820E	CHIP RES 820R 5% 200PPM 0402 1/10W	0402	Panasonic	ERJ-2GEJ821X
10	3	R2,R3,R4	1K	RES 1.0K OHM 1/16W 5% 0402 SMD	0402	Yageo	RC0402JR-071KL
11	1	R17	51K	CHIP RES 51K 5% 200PPM 0402 1/10W	0402	Panasonic	ERJ-2GEJ513X
12	2	R14,R15	4.7K	CHIP RES 4K7 5% 200PPM 0402 1/10W	0402	Panasonic	ERJ-2GEJ472X
13	10	R5,R6,R7,R19,R20,R21,R22,R23,R24,R25	100K	CHIP RES 100K 5% 200PPM 0402 1/10W	0402	Panasonic	ERJ-2GEJ104X
INDUCTORS							
14	1	L1	4.7uH	Power Inductor	SMD	FDK	MIPF2520D4R7
15	6	FB6,FB7,FB8,FB9,FB10,FB11	BEAD	FILTER CHIP 120 OHM 1.5A 0402	0402	Murata	BLM15EG121SN1D
DIODES							
16	1	D1	LED	Green LED	0603	Lite-On Inc	LTST-C190KGKT
IC'S							
17	1	U1	B1-03	RS9113-B1-03 Module	14X15	Redpine	RS9113
18	1	U3		RS232 Level Shifter	SSOP-16	Texas	MAX3232CDBR
ANTENNA TUNING NETWORK							
19	3	Z1,Z2,Z3	TBD	Refer to the description in the schematic. Sample part number for Z1 given here	0402	Murata	GRM1555C1H8R2CZ01D
Miscellaneous							

20	1	ANT1	Antenna	2.45GHz &5GHz SMD Antenna	SMD	Fractus	FR05-S1-NO-1-004
21	1	J1	Con	Microwave Coaxial Connector with switch	SMD	Murata	MM8430-2610RA1
22	1	J13	Jack	3 Pin Power Jack	DIP		
23	1	P1	DB9	9 Pin Female DB9 Connector	DIP		
Optional							
24	2	C6,C7	20pF	CAP CER 20PF 25V 5% NP0	0402	Murata	GRM1555C1E200JZ01D
25	1	C14	8.2nF		0402	Murata	
26	2	C12,C13	0.1uF	CER CHIP C 0.1U 10% X5R 0402 10V	0402	Murata	GRM155R61A104KA01D
27	1	R13	10K	CHIP RES 10K 5% 200PPM 0402 1/10W	0402	Panasonic	ERJ-2GEJ103X
28	2	R10,R12	100K	CHIP RES 100K 5% 200PPM 0402 1/10W	0402	Panasonic	ERJ-2GEJ104X
29	2	R26,R27	4.7K	CHIP RES 4K7 5% 200PPM 0402 1/10W	0402	Panasonic	ERJ-2GEJ472X
30	2	R9,R11	1M	CHIP RES 1M 5% 200PPM 0402 1/10W	0402	Panasonic	ERJ-2GEJ105X
31	1	SW1	sw	SWITCH TACTILE SPST-NO 0.02A 15V	SMD	ALPS	SKRAAKE010
32	1	U2	Reset	IC MPU/Reset circuit	SOT23-5	Maxim	MAX6415UK-T
33	1	Y1	Crystal	CRYSTAL 32.768KHZ 9PF SMD	SMD	Epson	MC-146 32.768000kHz 12.5
Do Not Populate							
34	1	R16	0E	CHIP RES 0.0R 5% 200PPM 0402 1/10W	0402	Panasonic	ERJ-2GE0R00X

Table 14: Bill of Material for UART mode

Note:

Antenna connection:
The 'microwave coaxial connector with switch' shown would not be required.

The RF_OUT2 (Module Pin No. 32) signals may be directly connected to an on-board chip antenna, or may be terminated in an SMA connector of any form factor for enabling the use of external antennas.

There is NO DC blocking available on RF_OUt1 & RF_Out2.

2.3 Recommended PCB Landing Pattern

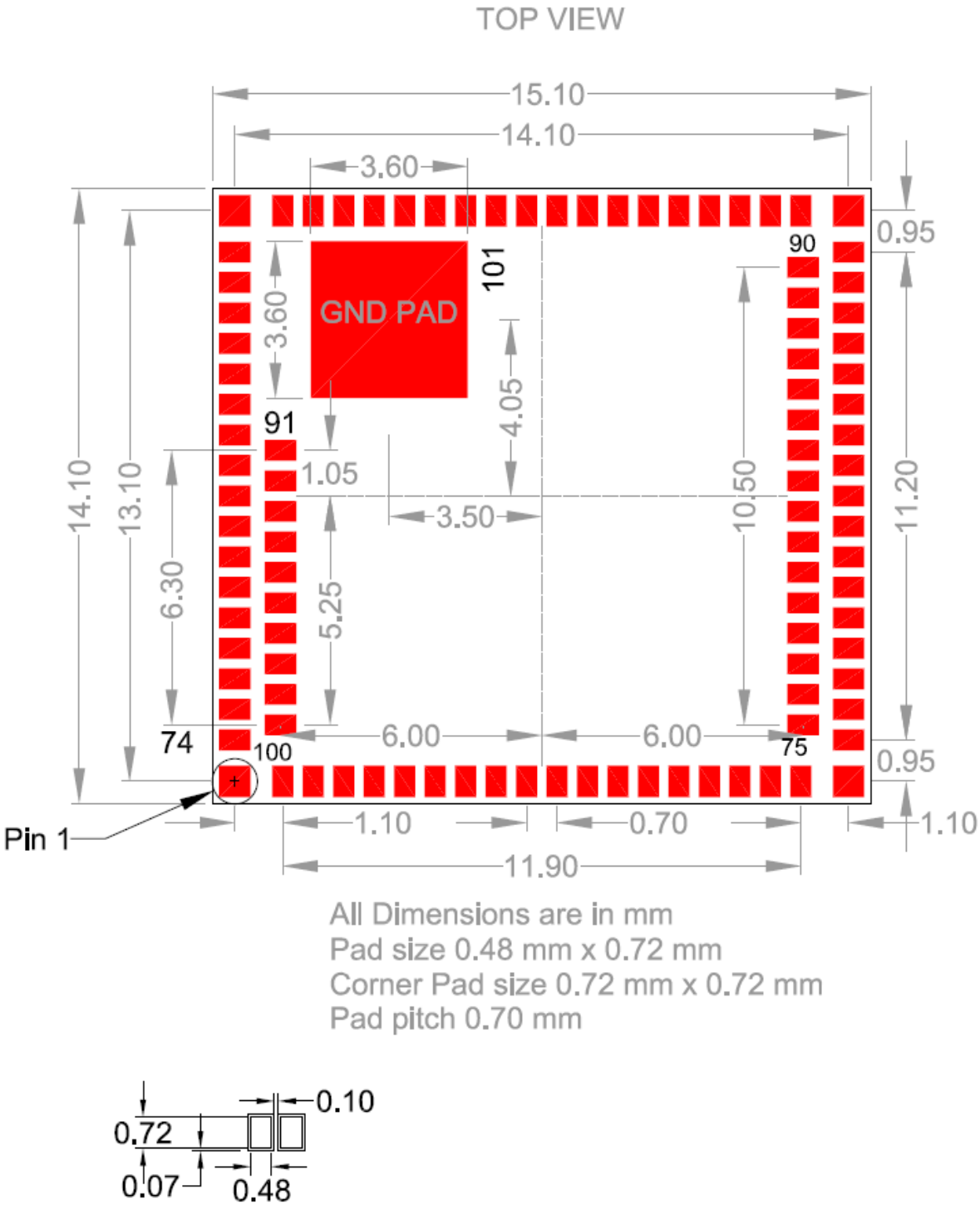

Figure 21: PCB Landing Pattern for 9113 Module without Integrated Antenna

2.4 Circuit and Layout Guidelines

The following are guidelines for integrating the RS9113 module without integrated antenna

1. The Wireless module has one ground pad of size 3.84mm x 3.96mm. An application's layout must have a provision to include this.
   - Please provide a 3.60mm x 3.60mm copper pads on the Top side of the application board. Please open the solder mask in this area so that the Cu is exposed.
   - Please provide a 3.60mm x 3.60mm copper pad on the bottom side of the application board. Please open the solder mask in this area so that the Cu is exposed.
   - The RF ground pad should have 16 Vias, Each via should have a pad size of 24mil diameter and a 16mil drill.

2. For RESET, one of the following three options should be followed.
   a. Reset may be driven by an R-C circuit. The recommended value of 'R' is 100 KΩ and the recommended value of 'C' is 0.1uF.
   b. Reset may be driven IC based circuit.
   c. The RESET can be Host driven. At the time of Power-on, Please ensure that the reset is held low for 20mSec or more. After this the reset should be driven high.
3. The RF trace on RF_OUT should have a characteristic impedance of 50 ohms. They can use any standard 50 RF trace (Microstrip or Coplanar wave guide). The width of the 50 ohms line depends on their PCB stack like the dielectric of the PCB, thickness of the copper, thickness of the dielectric and other factors. Customers should work with their fabrication unit to get these factors right.
4. To evaluate transmit and receive performance like Tx Power and EVM, Rx sensitivity etc., a 'microwave coaxial connector with switch' should be placed between RF_OUT and the antenna.
5. CLK_REF is the reference clock to the module and should therefore be routed with minimum trace length and should be routed away from other switching or sensitive traces.

2.5 Antenna Layout Recommendations

The choice of antenna will depend on the application. However, some recommendation is listed below if an on-chip antenna is desired to be used

- Fractus FR05-S1-NO-1-004

Please make sure that the Cu is etched out in all the Layers in the Antenna region. The Ground plane should be removed from under and both sides of the antenna. Please follow the rules listed in the picture below while doing the layout for the chip Antenna.

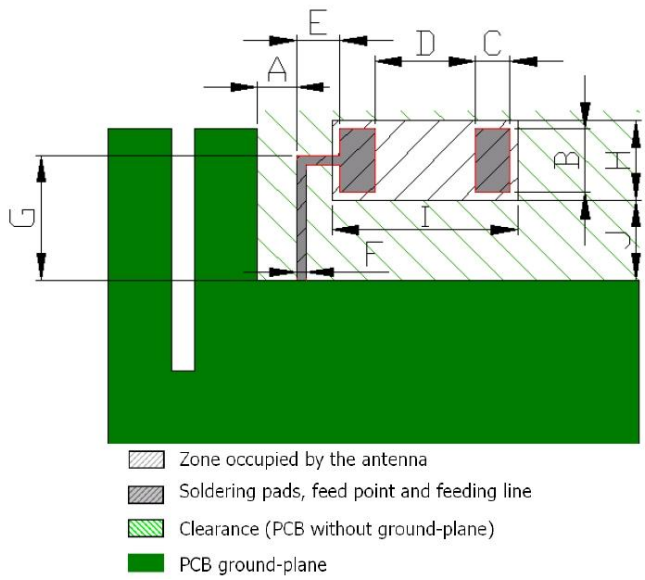

Measure	mm
A	1.5
B	2.4
C	1.3
D	3.8
E	1.6
F	0.4
G	4.7
H	3.0
I	7.0
J	3.0

Tolerance: ±0.2 mm

NOTE: The attached picture shows the antenna footprint details for 0.8mm thickness FR4 PCB

Figure 22: Chip Antenna Layout Recommendations

The chosen Chip Antennae are λ/4 antennae and would require external ground plane for proper functioning and the length of the ground plane behind the antenna (from the feed point of antenna to backwards) should be at least one or two inches .

It is recommended to characterize the antenna portion using a Network Analyzer. Electrical performance of any Chip antenna is influenced by the physical characteristics of the surrounding ground plane, feed line, other devices, and materials. This can be used as an advantage by manipulating certain parameters to affect resonant frequency and match:

1. Ground plane configuration
2. Distance from antenna
3. Topology around antenna
4. Feed point transmission line impedance
5. Trace width
6. Trace length
7. Matching Network
8. PCB substrate thickness
9. PCB substrate dielectric constant.

2.6 Sample layout in SDIO mode

This section provides a sample layout of a board that instantiates RS9113 module without integrated antenna. This reference board is an SDIO module with a standard interface into an SDIO slot

2.6.1 Top Layer

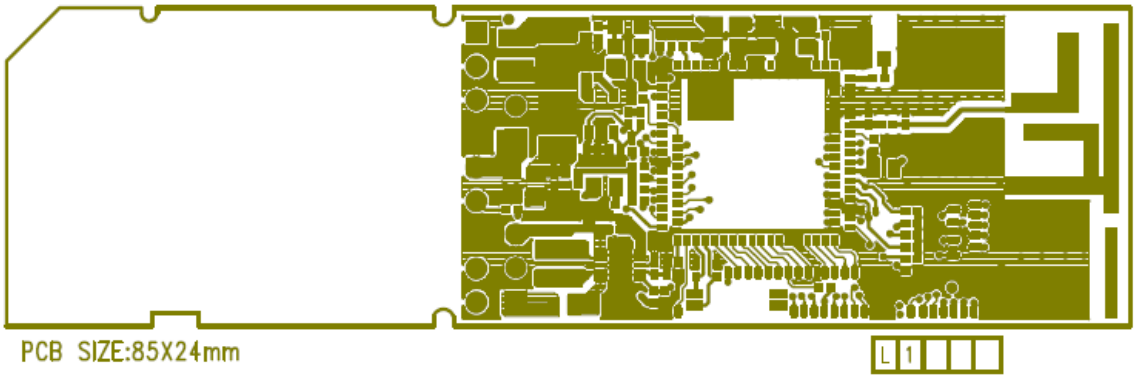

Figure 23: PCB Top Layer Diagram

2.6.2 Layer2

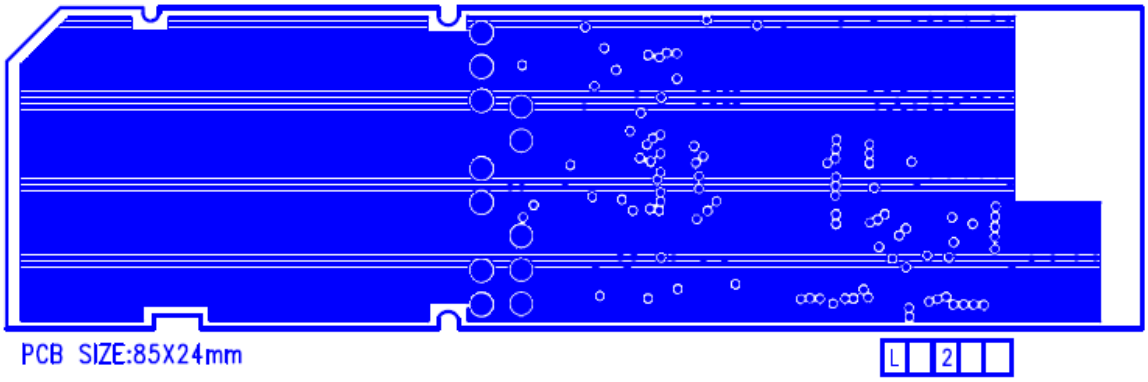

Figure 24: PCB Layer2 Diagram

2.6.3 Layer3

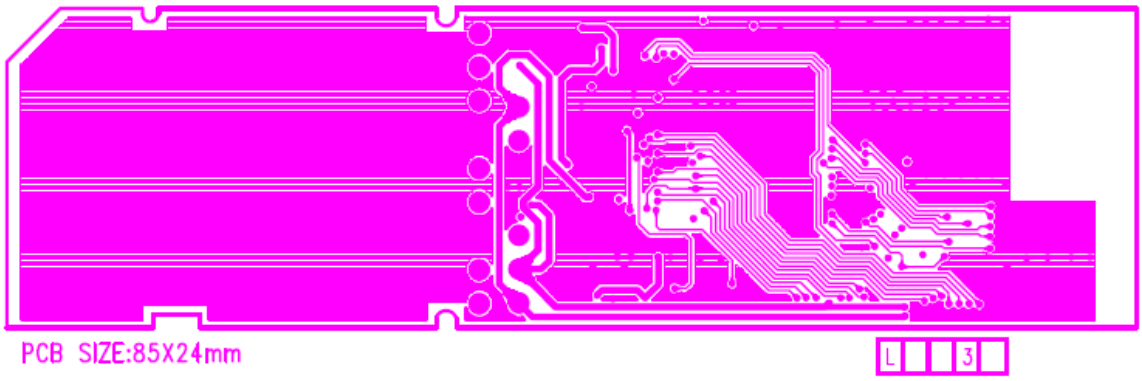

Figure 25: PCB Layer3 Diagram

2.6.4 Bottom Layer

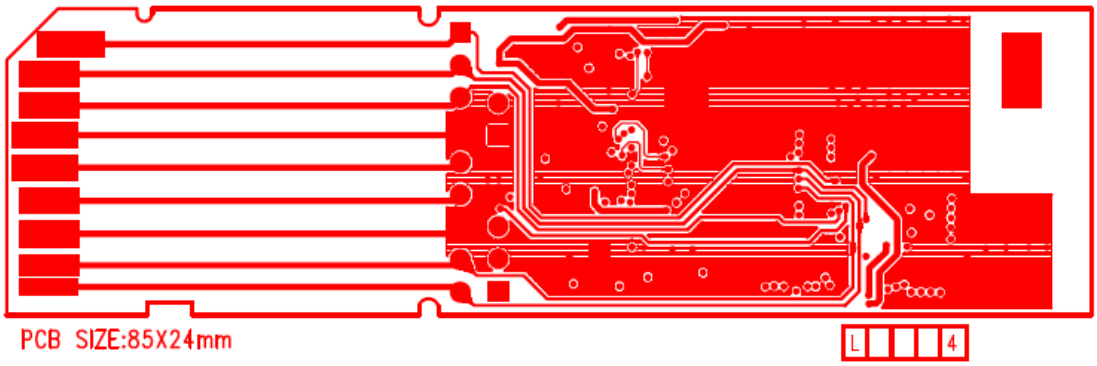

Figure 26: PCB Bottom Layer Diagram

2.6.5 Component Placement

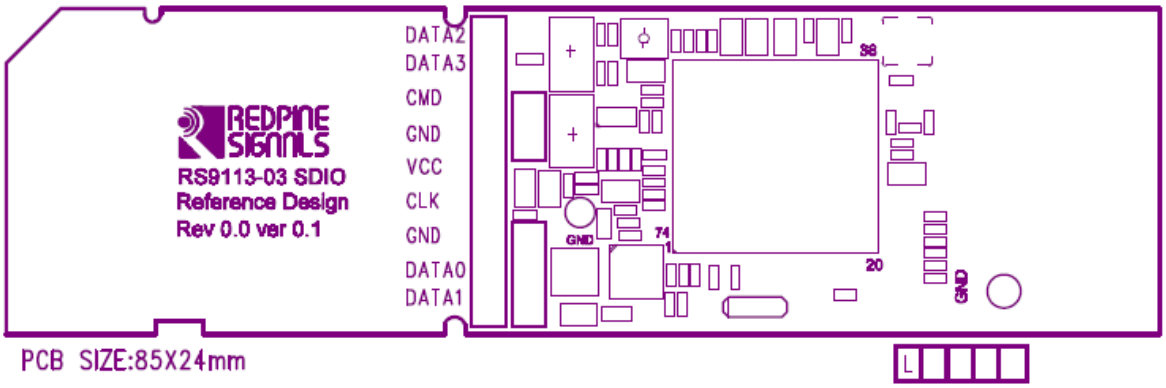

Figure 27: PCB Component Placement Diagram

Revision History

Revision No.	Version No.	Date	Changes
1	1.0	July'13	Initial Version. Applicable to module series without version label
2	1.1	Aug'13	Schematics and Bill of Material are updated
3	1.1	Dec'13	Updated SPI interface pins pull resistors requirements
4	1.2	Feb'14	1) Edited PCB landing pattern dimensions for module with integrated antenna. 2) Added notes in sections 1.2 and 2.2
5	1.21	Feb'14	Sections 1.2 and 2.2: Swapped columns HOST_SEL_0 and HOST_SEL_1.
6	2.0	Feb'14	1) Edited schematics, layout diagrams. 2) Updated module dimensions and PCB land pattern dimensions, BOM.
7	2.1	Mar'14	1) Corrected SPI_MOSI and SPI_MISO in SPI mode schematics. 2) Minor edit to notes on UART host select: changed nomenclature from pull resistor to pull-down resistor. 3) Modified sample layout figures in section 1.5.
8	2.2	Oct'14	1) BOOT_MODE0 pulldown added for USB Mode 2) Added note on thermal vias on the thermal pad. 3) Added filtering section for pin USB_VDDA. 4) Minor Edits on the BOM. 5) USB CDC Mode schematics added for module with antenna and Without Antenna.

Revision No.	Version No.	Date	Changes
			6) Minor Edits on Landing pattern.